WM-GX50/GX51

SERVICE MANUAL

AEP Model
UK Model
Saudi Arabia Model

WM-GX50

WM-GX51

Model Name Using Similar Mechanism	WM-BF608
Tape Transport Mechanism Type	MF-WMBF608

SPECIFICATIONS

WM-GX50

Radio section

Frequency range

Where purchased	FM (MHz)	AM (kHz)
In Italy	87.5—108	526.5—1606.5
In Germany	87.6—107	531 —1602
In Saudi-Arabia	87.6—107	530 —1605
In other countries	87.6—107.9	531 —1602

Intermediate frequency FM: 28.6 MHz 150 kHz
AM: 55 kHz

Power requirements 1.5 V DC
One R6 (size AA) battery
Rechargeable battery (NC-6WM) (not supplied)
DC IN 1.5 V jack accepts
Sony AC-E15L AC power adaptor
(not supplied) for use on:

European and Saudi-Arabia model	220 V AC, 50 Hz
Other model	120 V AC, 60 Hz 220 V AC, 50 Hz

Battery life (Approximate hours)

	Playback	Radio reception	Recording from the built-in radio
Sony AM3 (N)	5 hrs.	7 hrs.	2 hrs.

Dimensions
Approx. 108.6 × 78.8 × 35.2 mm(w/h/d)
(4 3/8 × 3 1/8 × 1 7/16 inches)
incl. projecting parts and controls

Weight
Approx. 223 g (7.9 oz) not incl. battery and other accessories

Accessories supplied
Stereo headphones (1)
Stereo microphone (1)
Microphone stand (1)
Carrying case (1)

Design and specifications subject to change without notice.

Note

This appliance conforms with EEC Directive 87/308/EEC regarding interference suppression.

Optional accessories* AC power adaptor AC-E15L
Car battery cord DCC-E115L
Rechargeable battery NC-6WM
Battery charger BC-7L

* Your dealer may not handle these optional accessories. Please ask the dealer for detailed information.

—Continued on page 2—

RADIO CASSETTE CORDER

SONY®

MICROFILM

Radio section
Frequency range

Where purchased	FM (MHz)	AM (kHz)
In Italy	87.5—108	522—1611
In Germany	87.5—108	531—1602
In Saudi-Arabia	87.5—108	531—1602
In other countries	87.5—108	531—1602

Intermediate frequency
FM: 10.75 MHz
AM: 450 kHz
Antenna
FM: Headphones cord antenna
AM: Built-in ferrite bar antenna

Recording section
Recording system
4-track 2-channel stereo
Input
Microphone input (stereo minijack)
(PLUG IN POWER) sensitivity 0.77 mV (−60 dB) for lower impedance microphone

Tape player section and general
Frequency response (DOLBY NR off)
40 Hz—15 kHz (with the PB EQ selector set to NORMAL or CrO_2/METAL)
Output
Headphones (stereo minijack)
Load impedance 8—300Ω
Power output
5 mW + 5 mW at DC operation, 16Ω
Power requirements
1.5 V DC
Rechargeable battery
One R6 (size AA) battery
DC IN 1.5 V jack accepts:
- Sony AC-E15L AC power adaptor (not supplied) available in the United Kingdom for use on 240 V AC, 50 Hz
  available in other European countries for use on 220 V AC, 50 Hz
  available in other countries for use on 100—120 V AC or 220—240 V AC, 50 or 60 Hz
- Sony DCC-E115L (not supplied) for use with 12 V car battery

Battery life (hours)

Battery	Playback	Radio reception	Recording from the built-in radio
Sony AM3 (N)	Approx. 5	Approx. 7	Approx. 2

For maximum performance we recommend the use of alkaline batteries.

Dimensions
Approx. 108.6 × 78.8 × 35.2 mm(w/h/d)
($4^3/_8$ × $3^1/_8$ × $1^7/_{16}$ inches)
incl. projecting parts and controls
Weight
Approx. 226 g (8.0 oz) not incl. battery and other accessories
Accessories supplied
Lithium battery (CR2016) (1) Microphone (1)
Microphone stand (1) Stereo headphones (1)
Carrying case (1)

Design and specifications subject to change without notice.

Note
This appliance conformes with EEC Directive 87/308/EEC regarding interference suppression.

Optional accessories
AC power adaptor AC-E15L
Battery charger BC-7L
Rechargeable battery NC-6WM,
Car battery cord DCC-E115L
Lithium battery CR2016

Your dealer may not handle some of the above listed optional accessories. Please ask the dealer for detailed information.

TABLE OF CONTENTS

Section | Title | Page

SECTION 1. GENERAL
Parts Identification Nomenclature (WM-GX50) 3
Parts Identification Nomenclature (WM-GX51) 4
Service Notes 5

SECTION 2. DISASSEMBLY
2-1. Cabinet (Rear) Assy Removal 6
2-2. Flexible Board Removal 6
2-3. Tuner Board Removal (WM-GX50) 6
Tuner Board Removal (WM-GX51) 7

SECTION 3. ADJUSTMENTS
3-1. Mechanical Measurements 8
3-2. Electrical Adjustments 8

SECTION 4. DIAGRAMS
4-1. Block Diagram (Audio Section) 15
Block Diagram (Tuner Section WM-GX50) 17
Block Diagram (Tuner Section WM-GX51) 19
4-2. Printed Wiring Boards (Audio Section) 21
4-3. Schematic Diagram (Audio Section) 25
4-4. Schematic Diagram (Tuner Section WM-GX51) 30
4-5. Printed Wiring Boards (Tuner Section WM-GX51) ... 33
4-6. Printed Wiring Boards (Tuner Section WM-GX50) ... 35
4-7. Schematic Diagram (Tuner Section WM-GX50) 37

SECTION 5. EXPLODED VIEWS
5-1. Cabinet Section-1 39
5-2. Cabinet Section-2 40
5-3. Mechanism Section-1 (MF-WMBF608) 41
5-4. Mechanism Section-2 (MF-WMBF608) 42

SECTION 6. ELECTRICAL PARTS LIST 43

SAFETY-RELATED COMPONENT WARNING!!

COMPONENTS IDENTIFIED BY MARK ⚠ OR DOTTED LINE WITH MARK ⚠ ON THE SCHEMATIC DIAGRAMS AND IN THE PARTS LIST ARE CRITICAL TO SAFE OPERATION. REPLACE THESE COMPONENTS WITH SONY PARTS WHOSE PART NUMBERS APPEAR AS SHOWN IN THIS MANUAL OR IN SUPPLEMENTS PUBLISHED BY SONY.

WARNING !!

ADVARSEL!
Lithiumbatteri – Eksplosionsfare
Udskiftning må kun foretages
af en sagkyndig, og som
beskrevet i servicemanualen.

LITHIUM BATTERY
SHOULD ONLY BE CHANGED BY TECHNICAL PERSONNEL. THERE IS A RISK FOR EXPLOSION AT A WRONG HANDLING.

www.hifiengine.com

SECTION 1
GENERAL

This section is extracted from instruction manual.

[A] Parts Identification Nomenclature

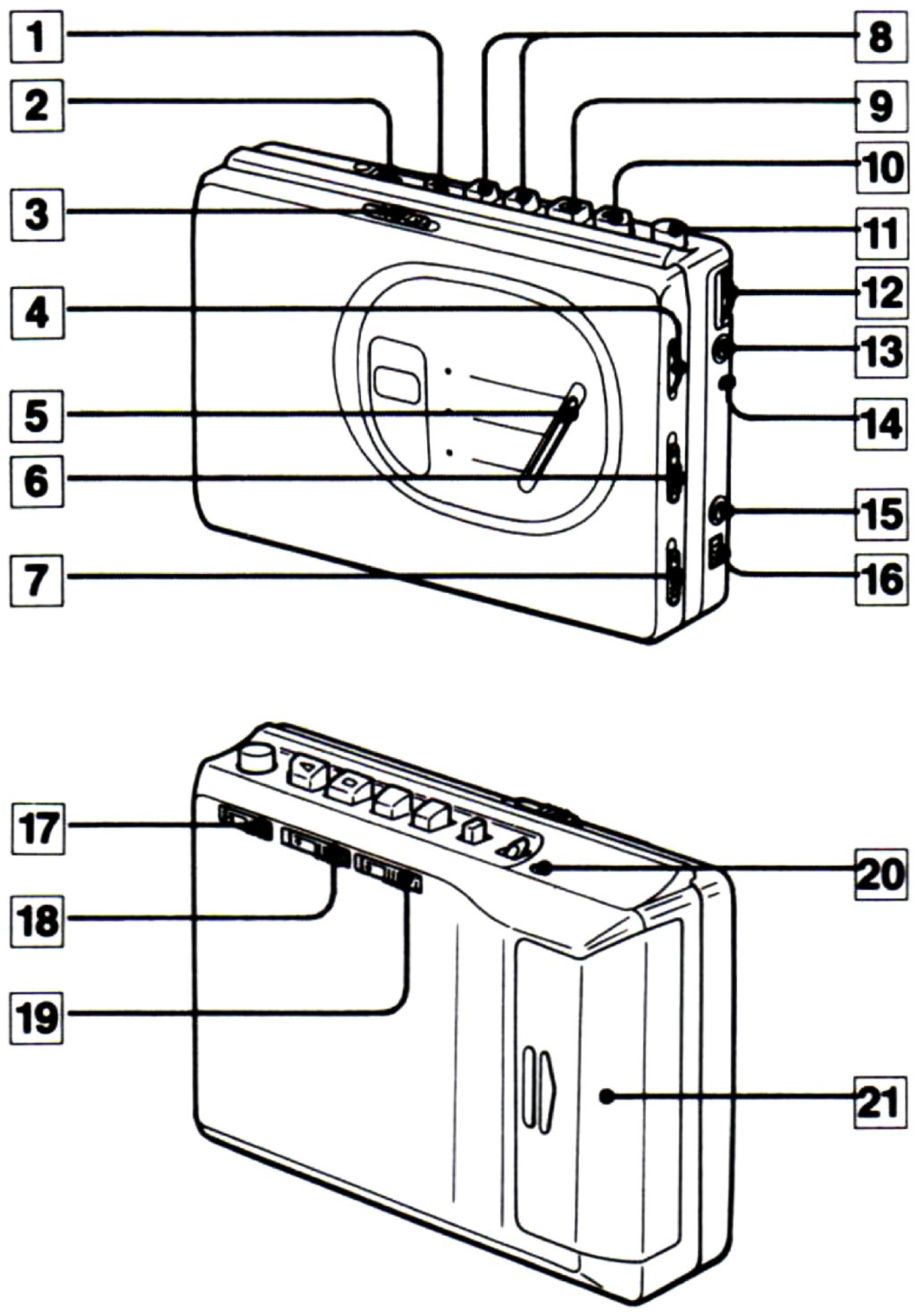

Parts Identification

(See illustration [A].)

1. DIR (tape transport direction change) button
2. ⇄MODE (tape transport) selector
3. FM SENS (LOCAL/DX) selector
4. Tuning control
5. Dial scale
6. BAND (FM/AM) selector
7. RADIO (FM MONO/FM ST)/TAPE (RADIO OFF) selector
8. ◀◀/▶▶ (fast winding) button
9. ■ STOP/EJECT button
10. ▶ PLAY button
11. ● REC (record) button
12. VOLUME control
13. 🎧 PHONES (headphones) jack
14. BATTERY indicator
15. MIC (microphone) (PLUG IN POWER) jack
16. MEGA BASS (NORM/MID/MAX) selector
17. PB EQ (CrO_2/METAL NORMAL) selector
18. DOLBY NR (PB) (Dolby noise reduction)(ON/OFF) selector
19. ISS (Interference Suppress Switch) selector
20. DC IN 1.5 V (external power input) jack
21. Battery compartment lid

A Parts Identification Nomenclature

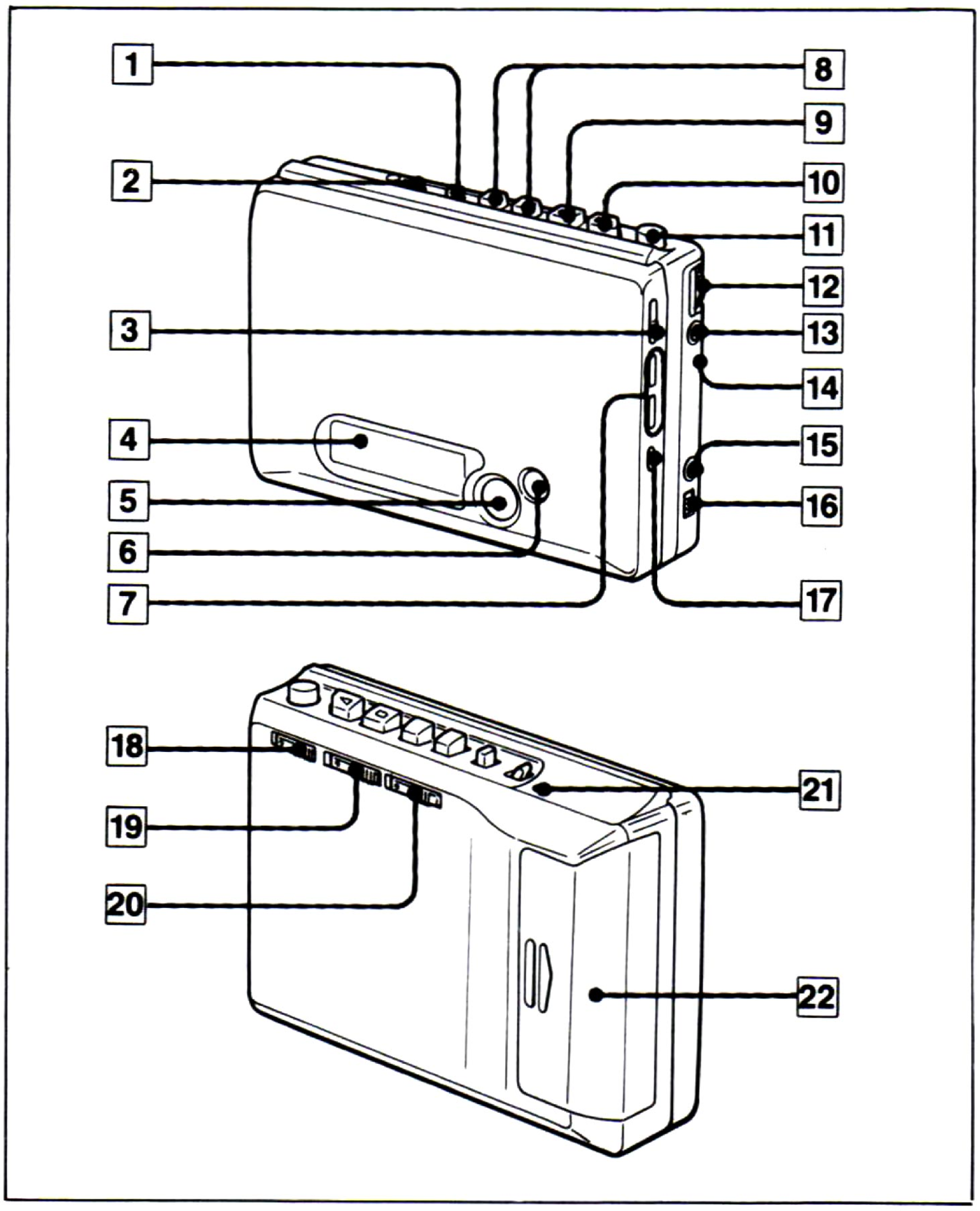

Parts Identification

(See illustration A .)

1 DIR (tape transport direction change) button
2 ⇄MODE (tape transport) selector
3 FM ST/MONO (stereo/monaural) selector
4 Display window
5 PRESET TUNE button
6 RADIO ON/OFF BAND button
7 +SCAN– buttons
8 ◀◀/▶▶ (fast winding) buttons
9 ■ STOP/EJECT button
10 ▶ PLAY button
11 ● REC (record) button
12 VOLUME control
13 🎧 PHONES (headphones) jack
14 BATTERY indicator
15 MIC (microphone) (PLUG IN POWER) jack
16 MEGA BASS (NORM/MID/MAX) selector
17 ENTER button
18 PB EQ (CrO_2/METAL NORMAL) selector
19 DOLBY NR (PB) (Dolby noise reduction) (ON/OFF) selector
20 ISS (Interference Suppress Switch) selector
21 DC IN 1.5 V (external power input) jack
22 Battery compartment lid

Service Notes

How to check the operation

When audio board has been removed from mechanical deck. Depress the PLAY (►) button to turn ON the S402 (POWER) and S401 (PLAY).

AUDIO BOARD - Component side -

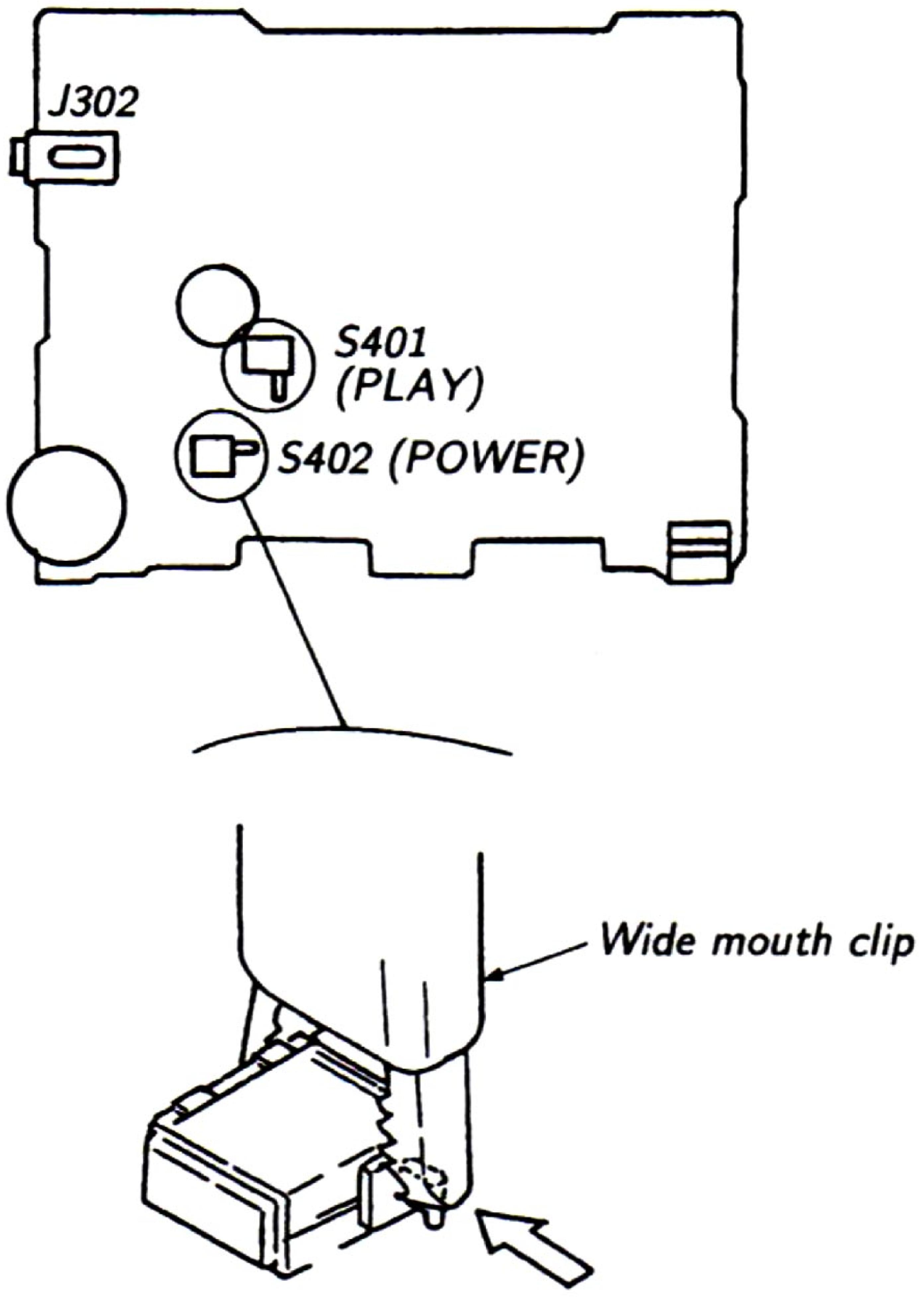

Flexible Circuit Board Repairing

-Keep the temperature of the soldering iron around 270℃ during repairing.

-Do not touch the soldering iron on the same conductor of the circuit board (within 3 times).

-Be careful not to apply force on the conductor when soldering or unsoldering.

Notes on Chip Component Replacement

-Never reuse a disconnected chip component.

-Notice that the minus side of a tantalum capacitor may be damaged by heat.

www.hifiengine.com

SECTION 2
DISASSEMBLY

Note : Follow the disassembly procedure in the numerical order given.

2-1. CABINET (REAR) ASSY REMOVAL

1. Remove five screws marked ❶.
2. Open the cassette lid assy.
3. Pull a part (marked Ⓐ) of cabinet (rear) assy slowly toward outside in order to remove the claw and lift up it to direction of arrow ❷.

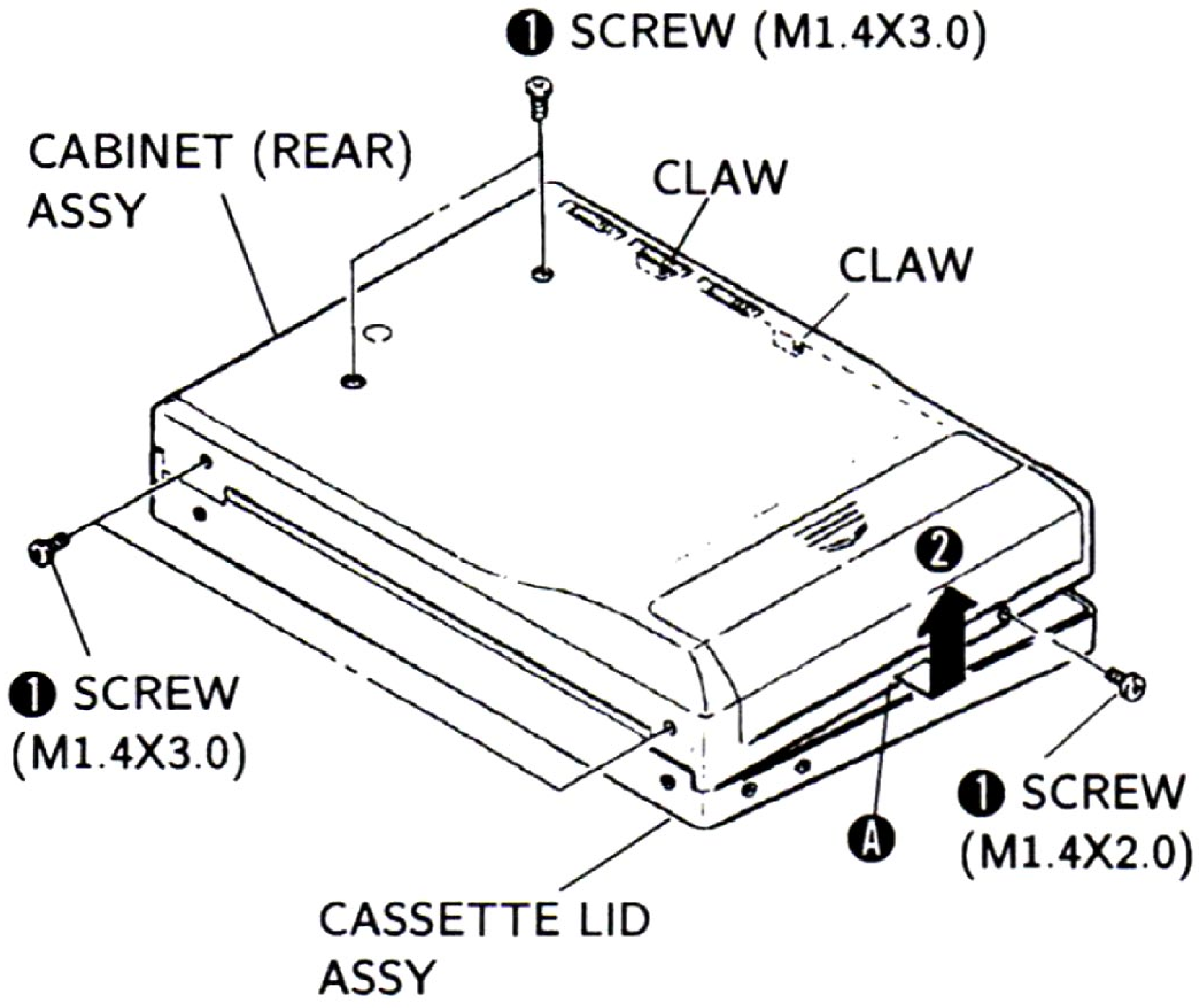

2-2. FLEXIBLE BOARD REMOVAL

1. Push a part (marked Ⓐ) of CN302 toward direction of arrow ❶.
2. Pull the flexible board toward direction of arrow ❷.

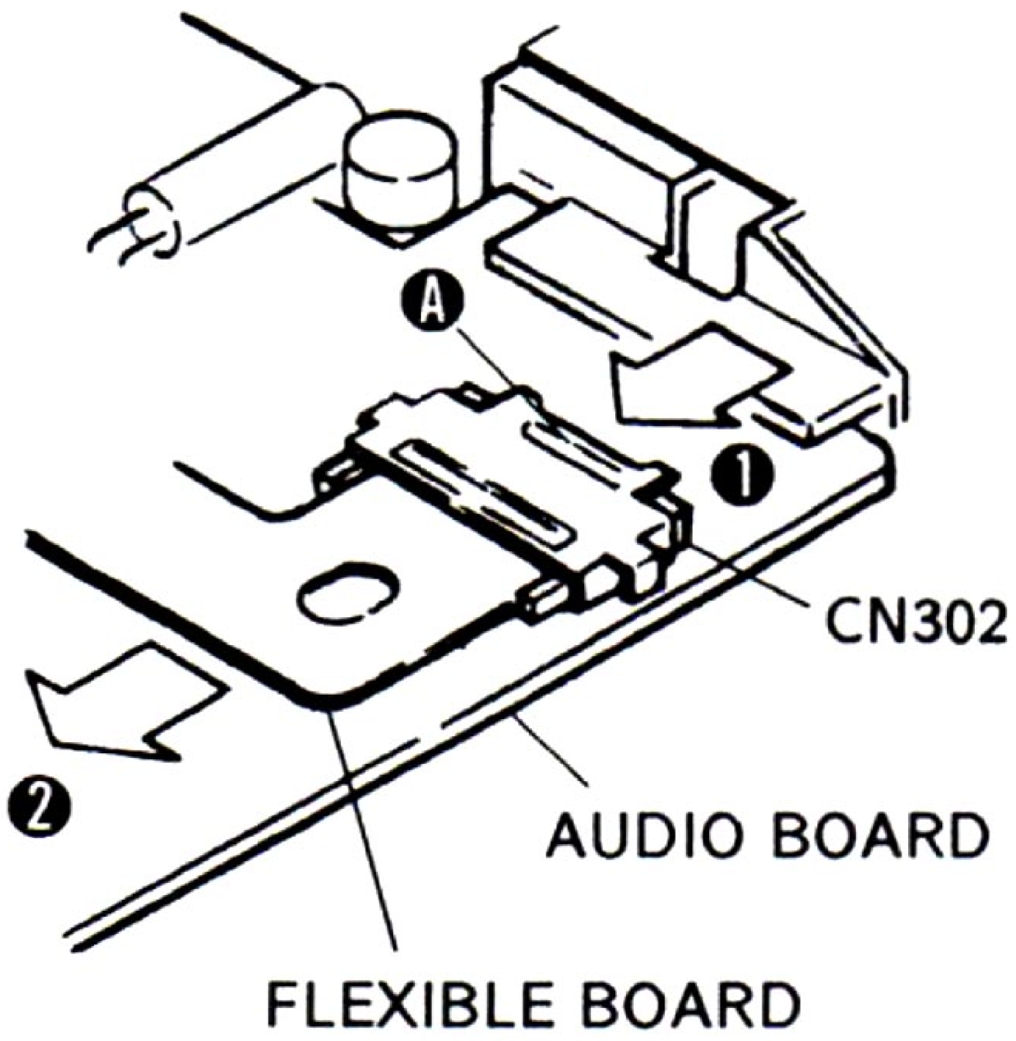

2-3. TUNER BOARD REMOBAL (WM-GX50)

1. Remove two screws marked ❶.
2. Remove the cover.
3. Remove the knob (SENS).
4. Warm up Ⓐ to Ⓓ portion by heater and move it slowly by tweezers.

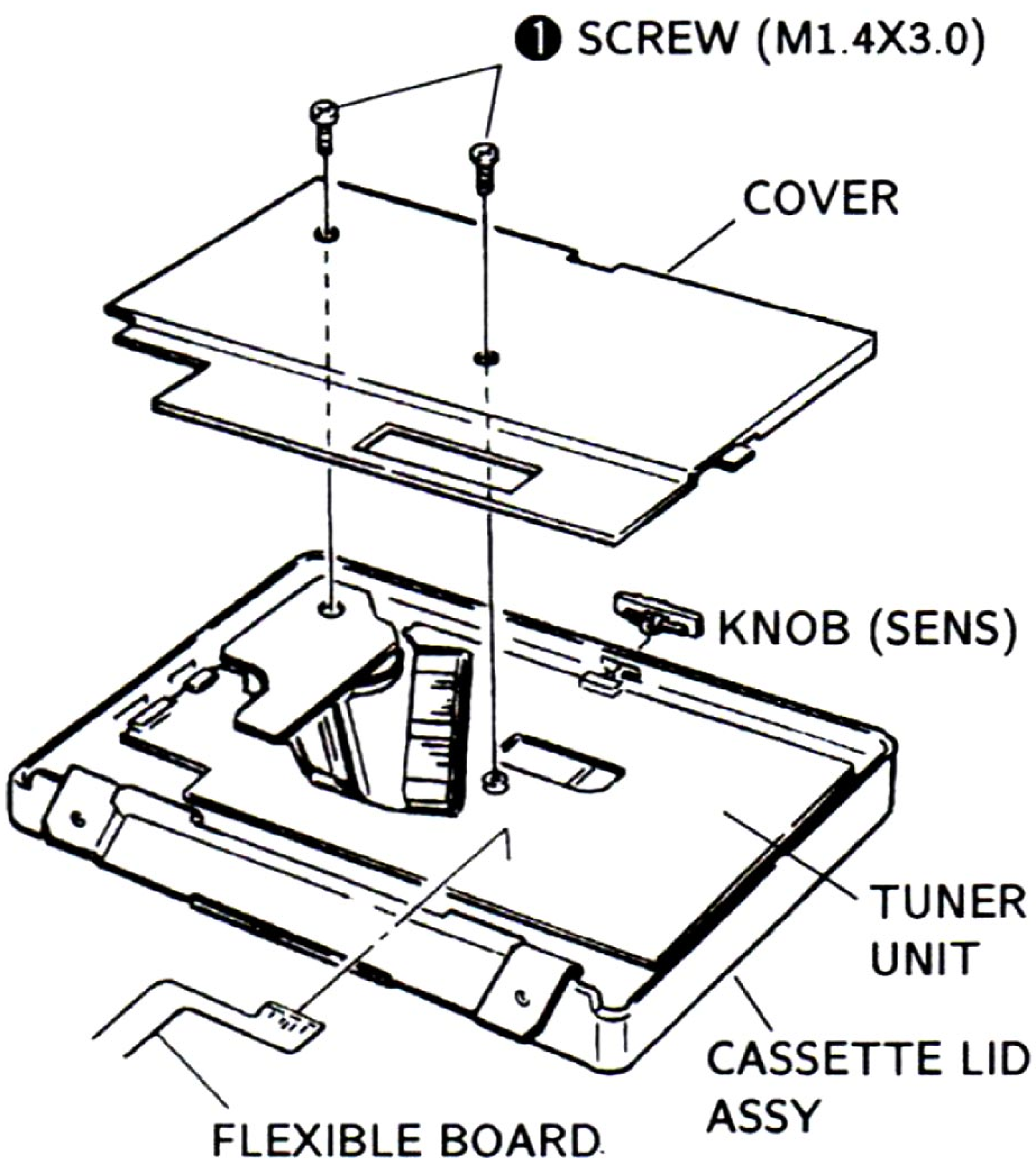

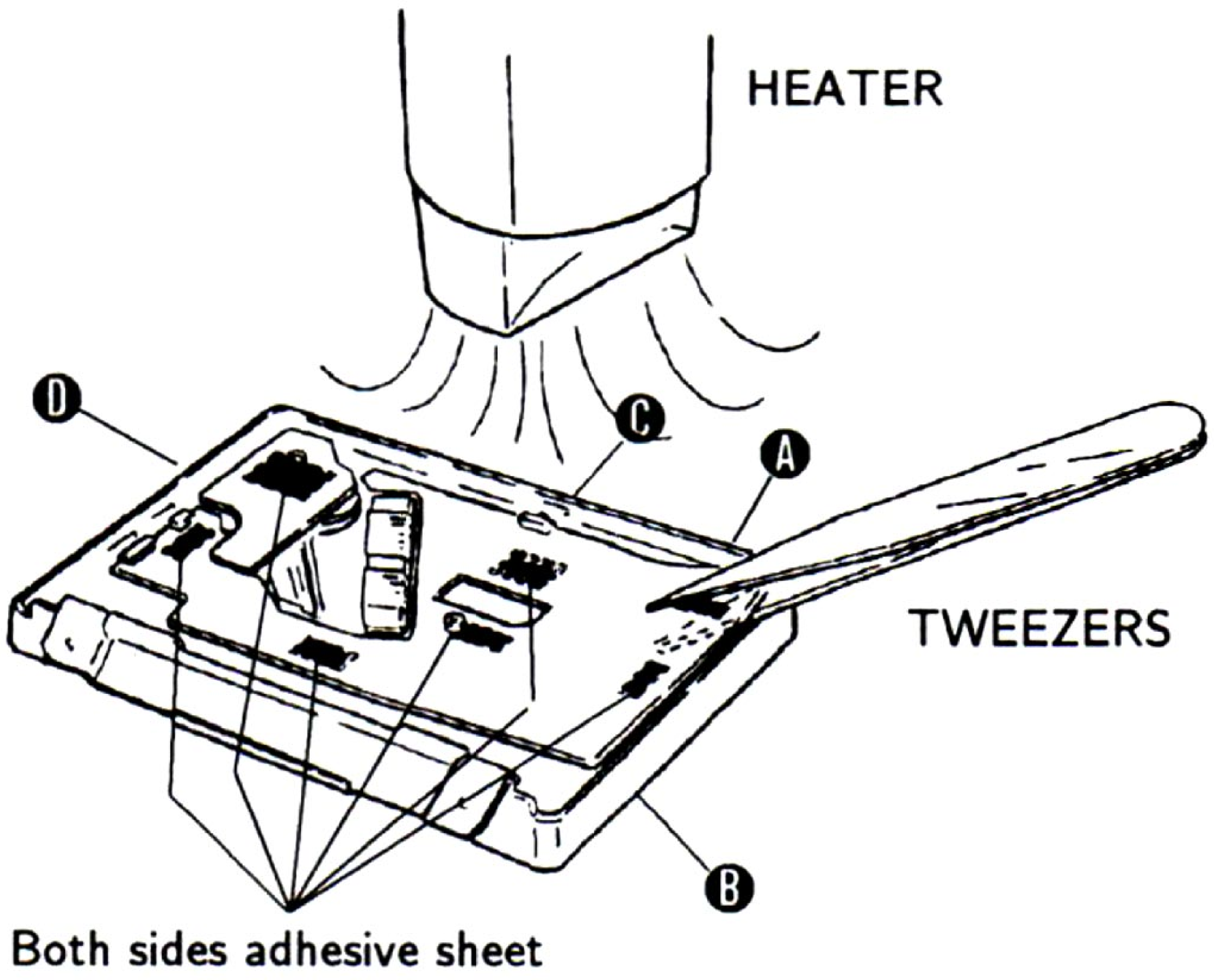

www.hifiengine.com

2-3. TUNER BOARD REMOBAL (WM-GX51)

1. Remove screw marked ➊.
2. Remove the cover.
3. Slide the battery case (LITHIUM) horizontaly and lift up toward direction of arrow ➋.
4. Remove screw marked ➌.
5. Lift up a part (marked Ⓐ) tuner board toward direction of arrow ➍.

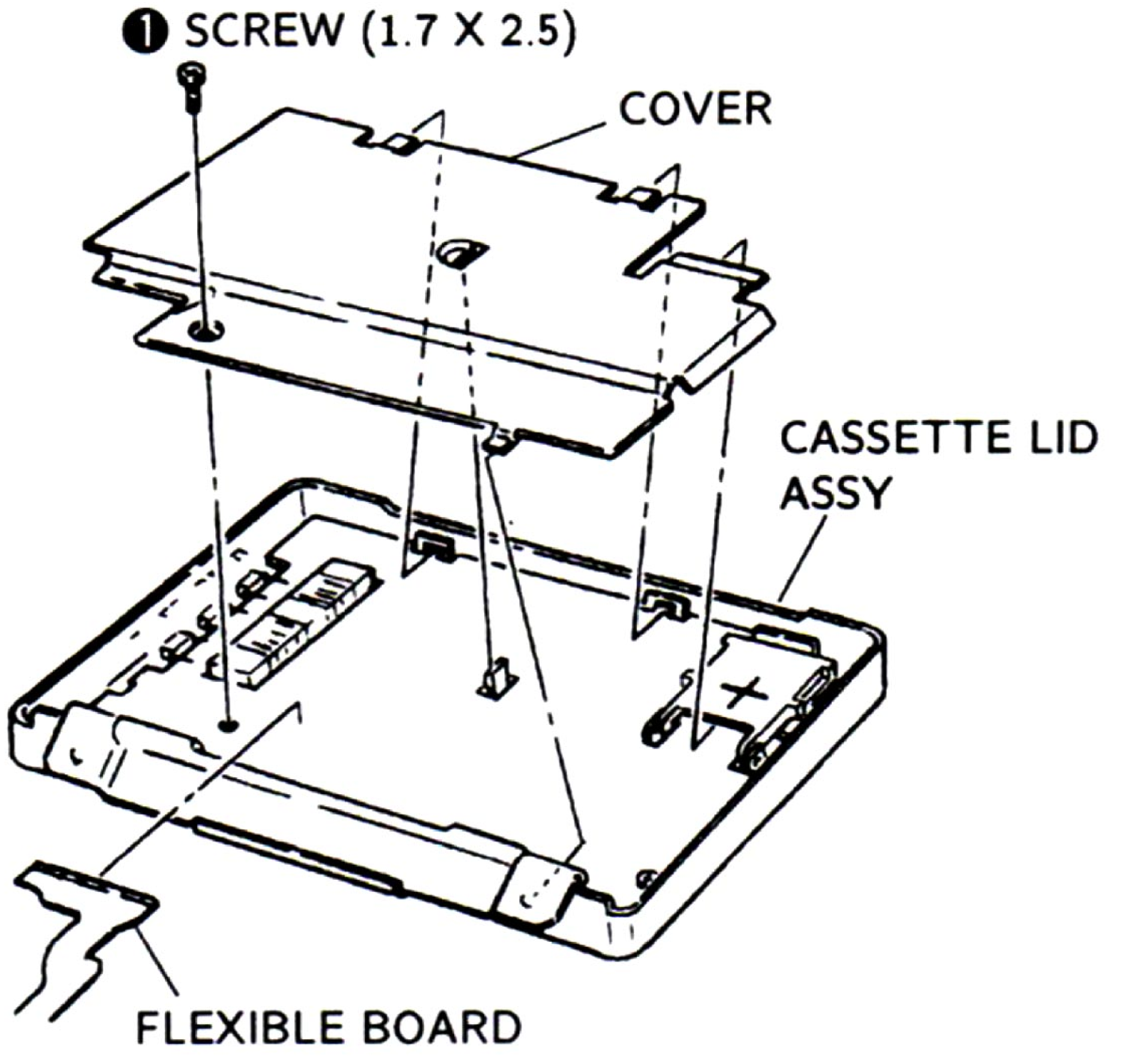

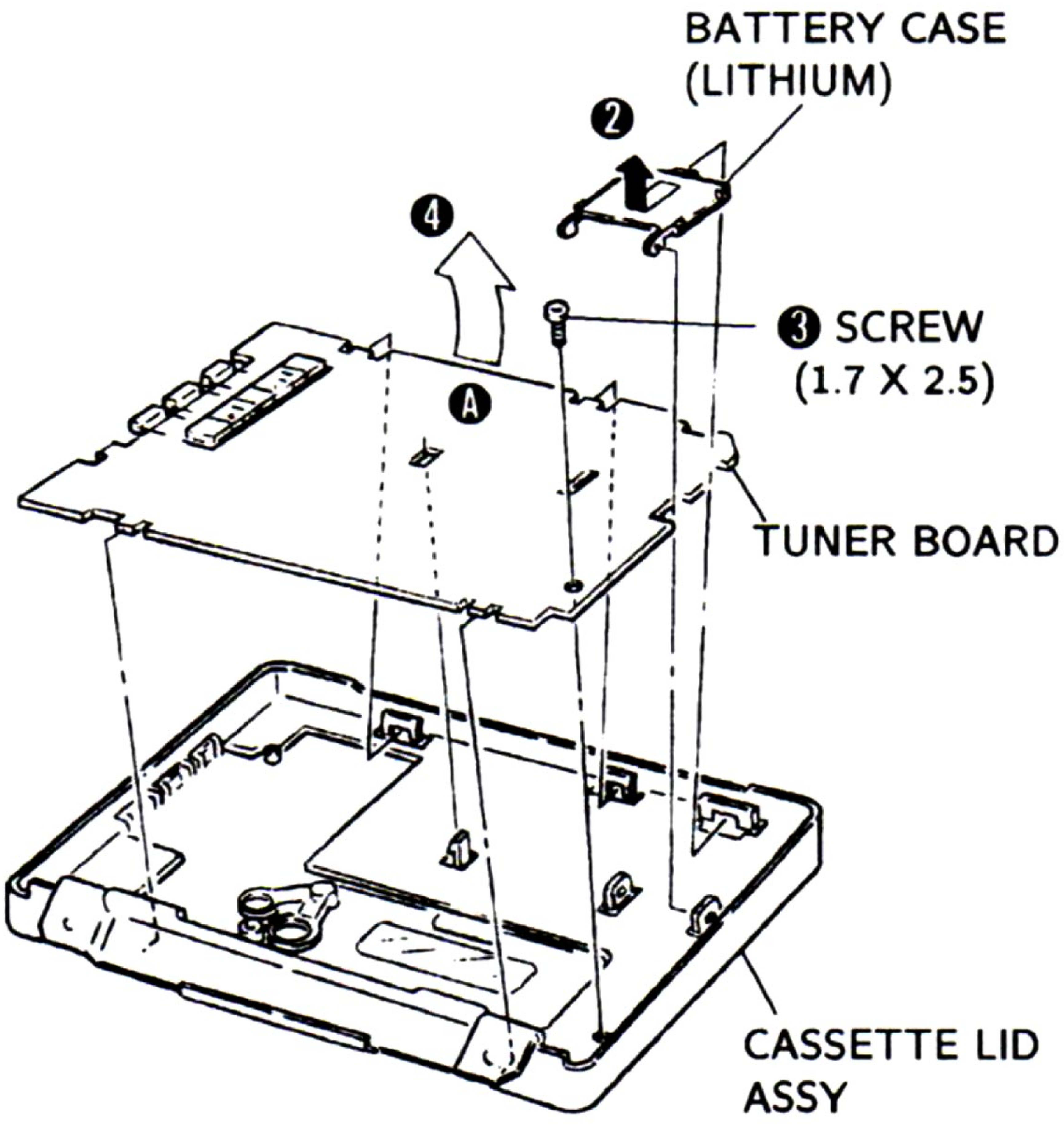

SECTION 3
ADJUSTMENTS

3-1. Mechanical measurements

PRECAUTION

1. Clean the following parts with a denatured-alcohol-moistened swab :
   playback head   pinch roller
   capstan   rubber belts
2. Demagnetize the playback head with a head demagnetizer.
3. Do not use a magnetized screwdriver for the adjustments.
4. After the adjustments, apply suitable locking compound to the parts adjusted.
5. The adjustments should be performed with the rated power supply voltage (1.3V) unless otherwise noted.

Torque Measurement

Mode	Torque meter	Meter reading
FWD	CQ-102C	22 - 38 g-cm 0.31 - 0.52 oz-inch
FWD Back Tension		1.0 - 3.0 g-cm 0.02 - 0.04 oz-inch
REV	CQ-102RB	22 - 38 g-cm 0.31 - 0.52 oz-inch
REV Back Tension		1.0 - 3.0 g-cm 0.02 - 0.04 oz-inch
FF	CQ-201B	more than 50 g-cm more than 0.7 oz-inch
REW		more than 50 g-cm more than 0.7 oz-inch

Tape Tension Measurement

Mode	Torque meter	Meter reading
FWD	CQ-403A	more than 50 g more than 1.77 oz
REV	CQ-403R	more than 50 g more than 1.77 oz

3-2. ELECTRICAL ADJUSTMENTS

PRECAUTION

1. Power supply voltage : 1.3V
2. Switch position
   FM switch : ST
   DOLBY switch : OFF
   DBB switch : NORM

Cassette Section

TEST TAPE

Type	Signal	Used for
WS-48A	3kHz, 0dB	Tape Speed Adjustment

Tape Speed Adjustment

Procedure :

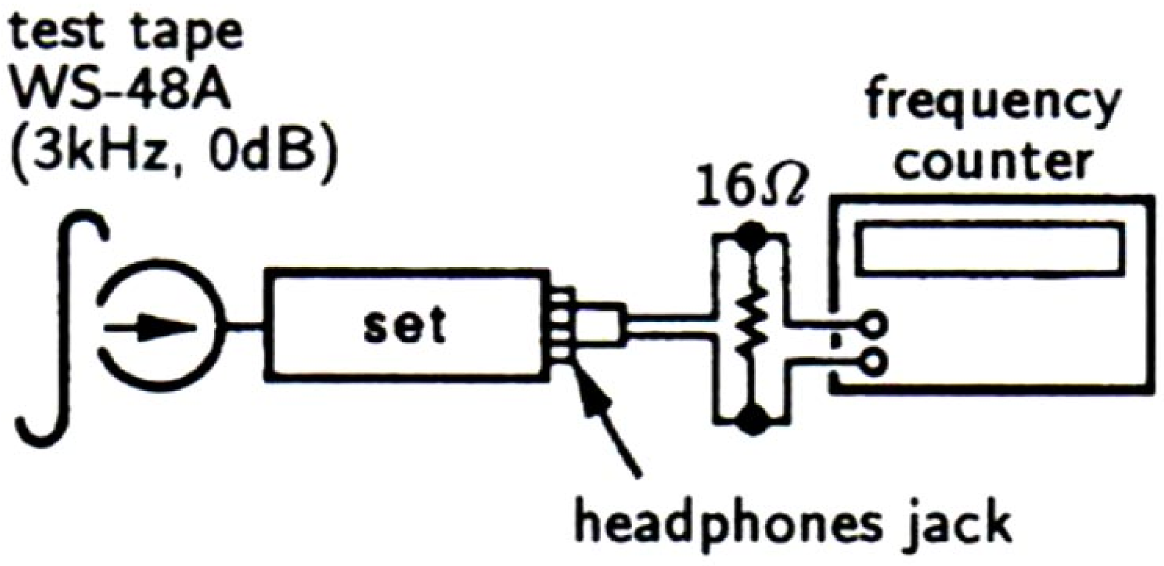

1. Playback WS-48A (tape center portion) in FWD mode.
   Adjust the RV601 so that the frequency counter read 3,000Hz ± 30Hz.
2. Playback WS-48A (tape center portion) in REV mode.
   Confirm that the reading of frequency counter is with 2.5% from the reading in step 1.

Adjustment Parts Location Digram

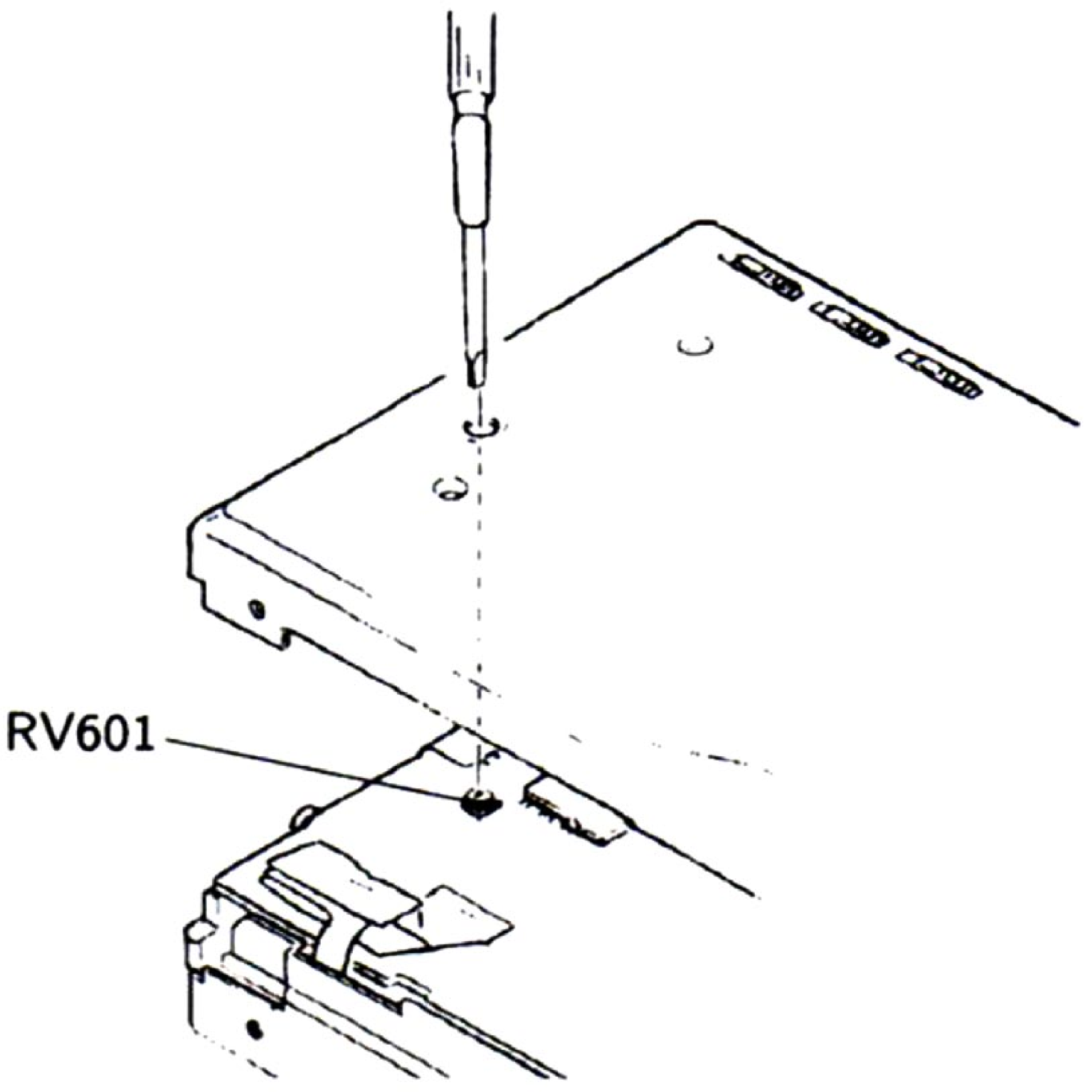

2. Playback check

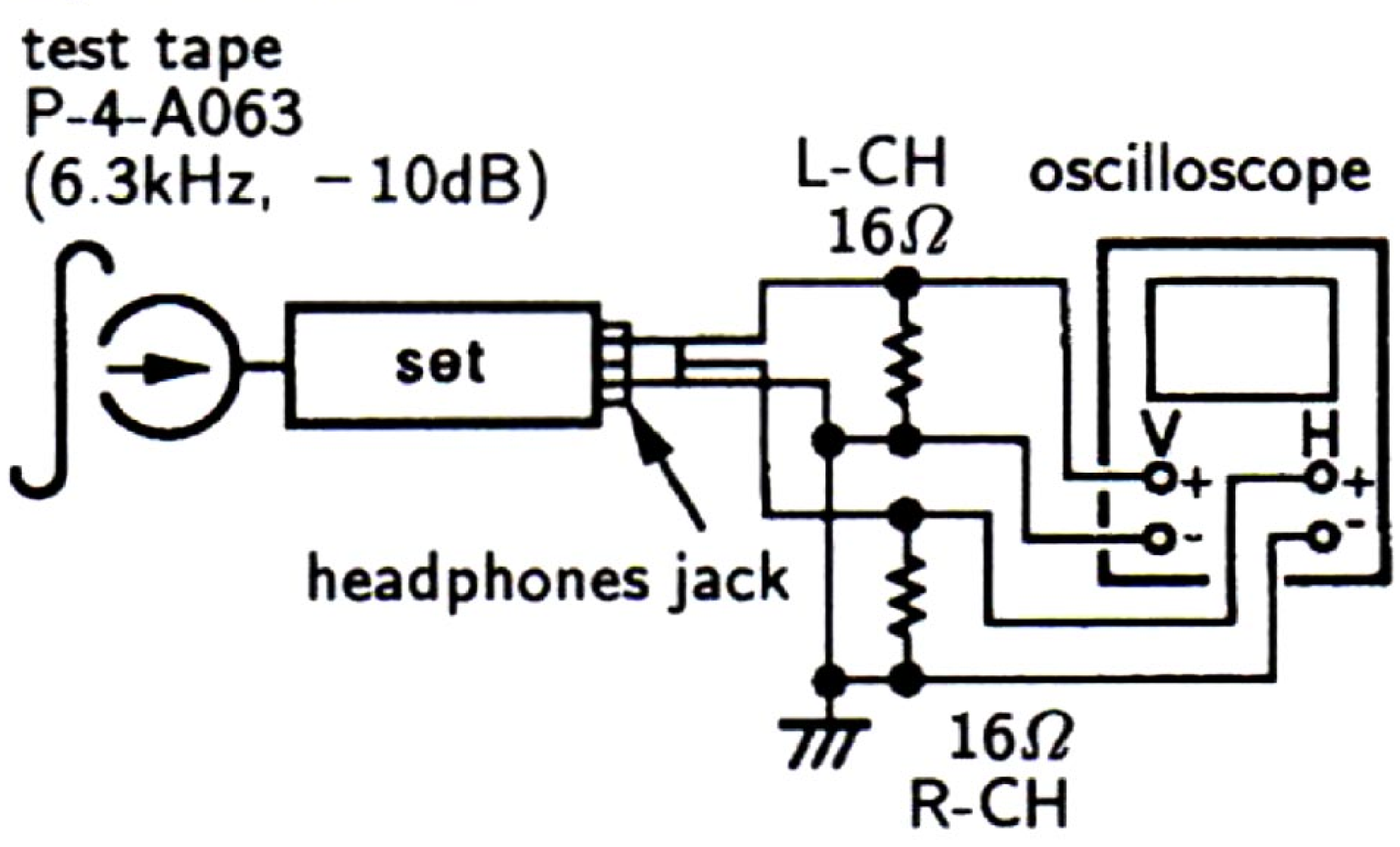

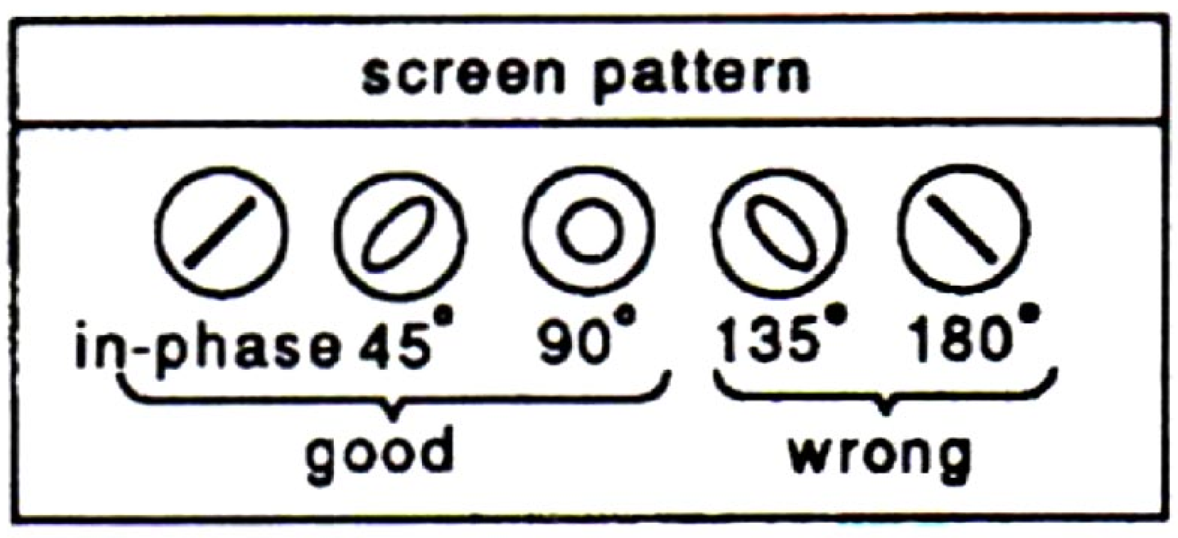

Tape Speed Adjustment

Procedure :

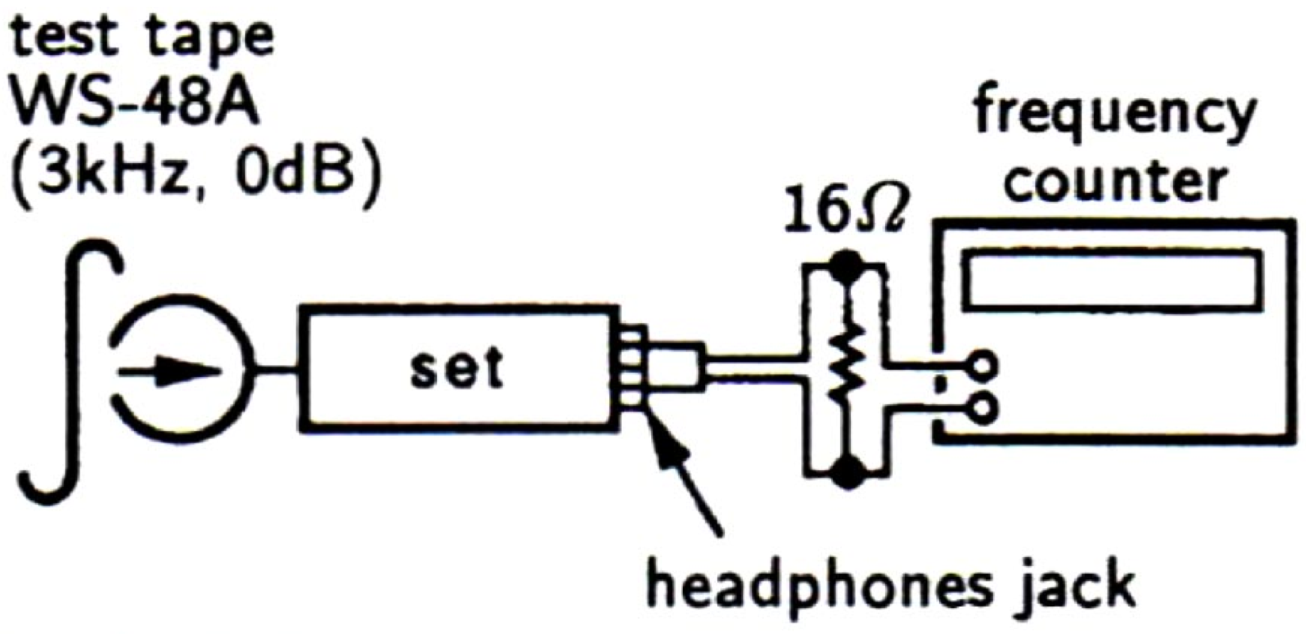

1. Playback WS-48A (tape center portion) in FWD mode.
   Adjust the RV601 so that the frequency counter read 3,000Hz ± 30Hz.
2. Playback WS-48A (tape end portion) in REV mode.
   Confirm that the reading of frequency counter is with 2.5% from the reading in step 1.

Adjustment Parts Location Digram

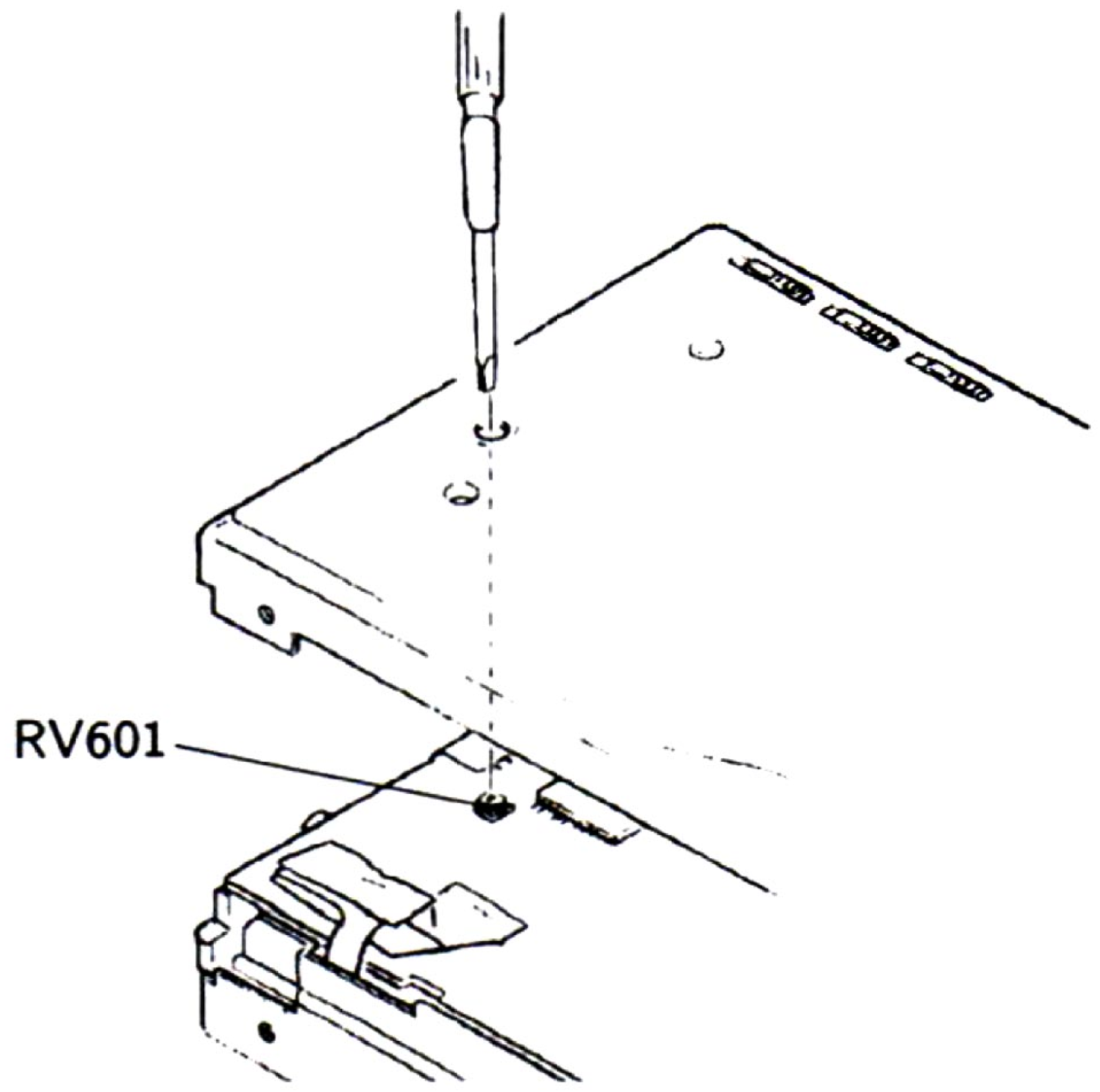

Tuner Section ONLY for WM-GX50

Power Supply Voltage Adjustment

Function switch : RADIO FM ST
Band switch : FM

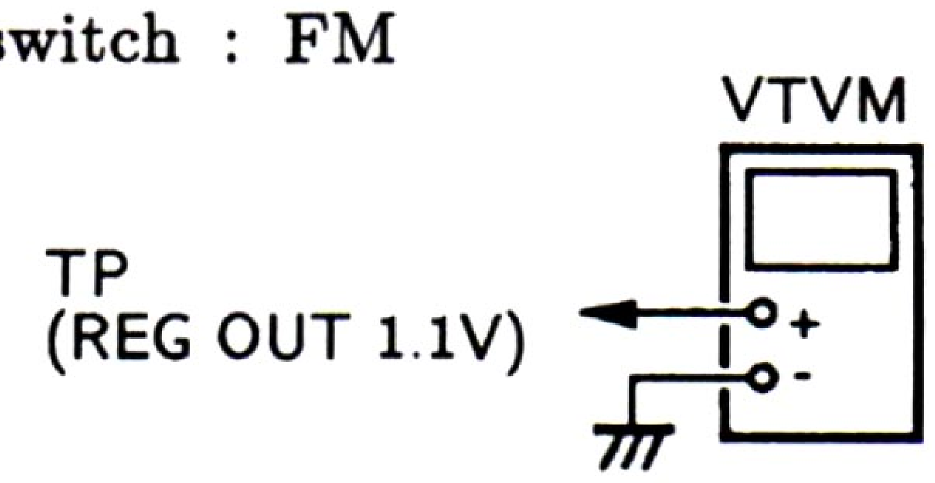

Adjustment part	Reading on VTVM
RV53	1.1 ± 0.01V

Tuning Voltage Adjustment

Function switch : RADIO FM ST
Band switch : FM

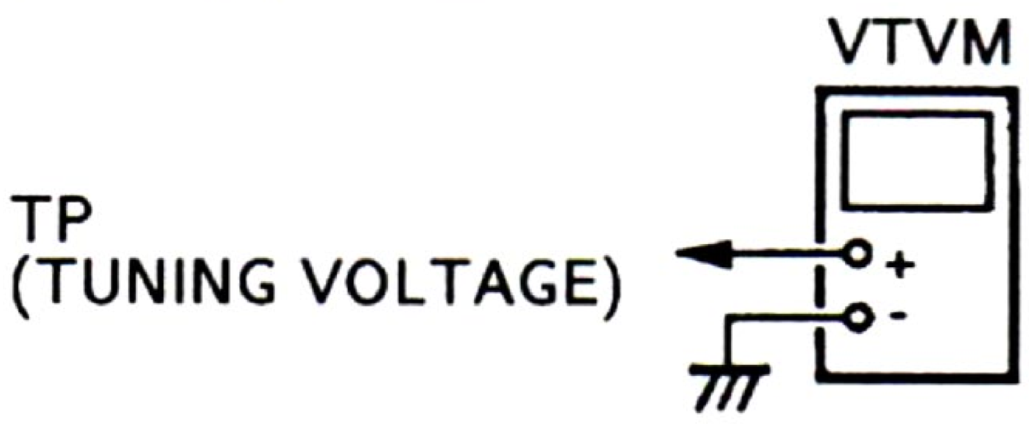

- Repeat the procedure in each adjustment several times since RV (f min) affects RV (f max) and RV (f max) affects RV (f min). This adjustment should end with the final adjustement of RV (f max).

Pointer position	Adjustment part	Reading on VTVM
f minimum	RV (fmin 1.0V)	1V±0.01V
f maximum	RV (fmax 9V)	9V±0.01V

Note :
RV (f min), RV (f max) is built-in the RV51 block.

FM VCO Adjustment

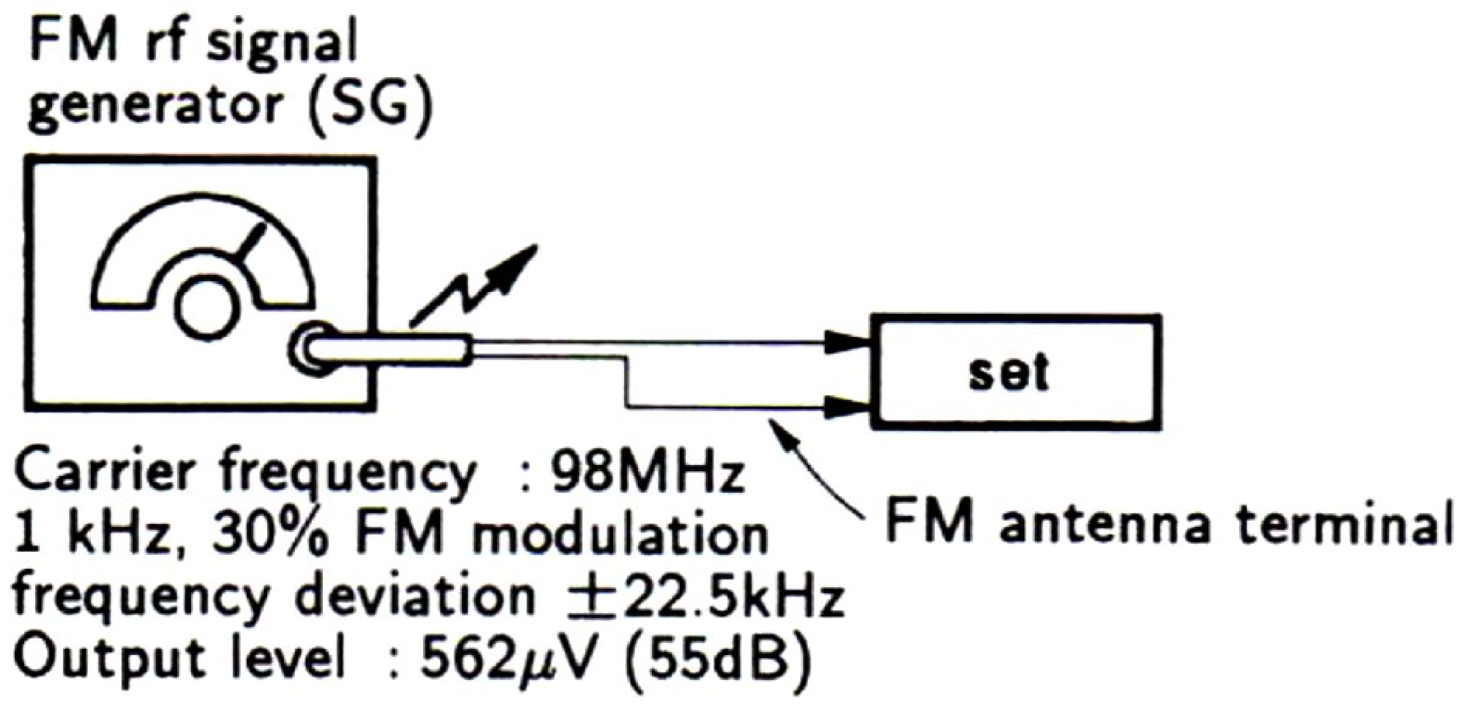

Function switch : RADIO FM ST
Band switch : FM

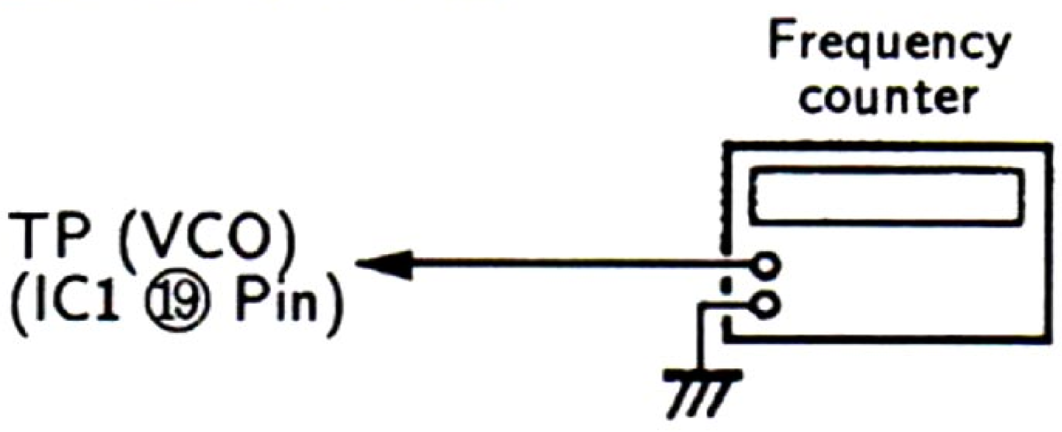

- Tune the set to 98 MHz.

Adjustment part	frequency counter
L5	37.95kHz±0.03kHz

FM 2nd OSC Adjustment

Function switch : RADIO FM ST
Band Switch : FM
Adjustment part : L6

- **How to adjust FM 2nd. oscillator useing the spectrum analyzer.**

1. Prepared the spectrum analyzer and RF amplifier as shown in below drawing.
2. Set the switch to radio FM stereo position of WM-GX50.
3. Put the RF amplifeir block which connected to spectrum analyzer to just beside and one centi-meter away from L6.
4. Adjust L6 to bring up maximum waveform at 57.3MHz position in spectrum analyzer.

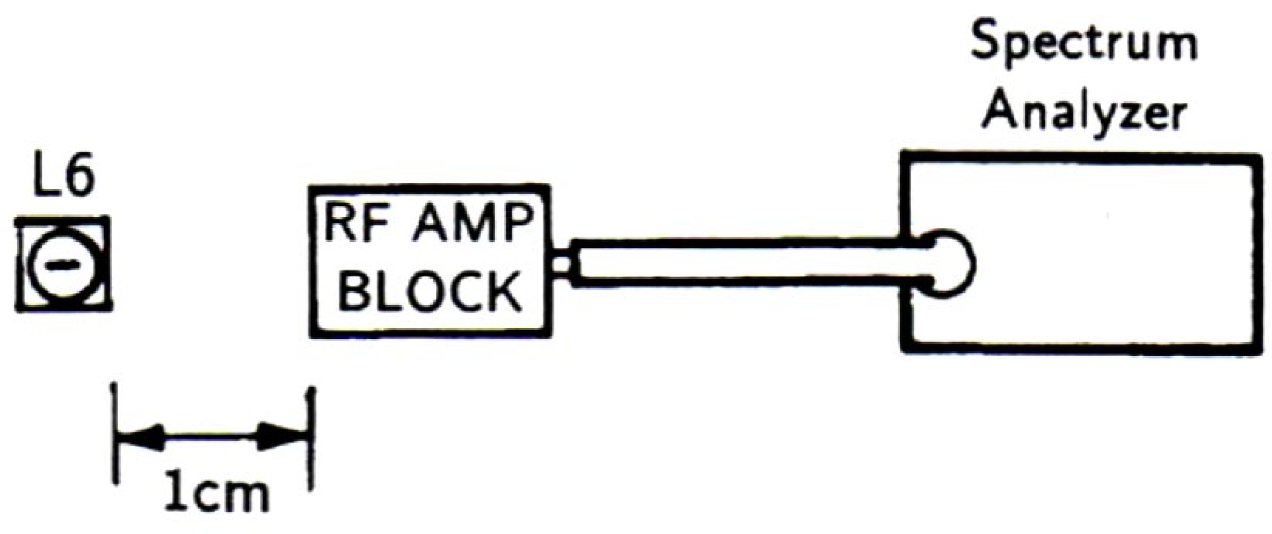

- **How to adjust FM 2nd. oscillator if the spectrum analyzer is not available.**

1. Prepared built-in SSB digital tuning radio such as SONY ICF-2001 or equivalents.
2. Tuned 57.3MHz ± 0.1MHz at the SSB mode of built-in SSB digital tuning radio.
3. Set the switch to radio FM stereo position of WM-GX50.
4. Put the telescopic antenna of built-in SSB digital tuning radio to just beside and one centi-meter away from L6 as show in below drawing.
5. Digital tuning radio will be reproduce peep sound.
6. Adjust L6 to fade out or minimize peep sound.

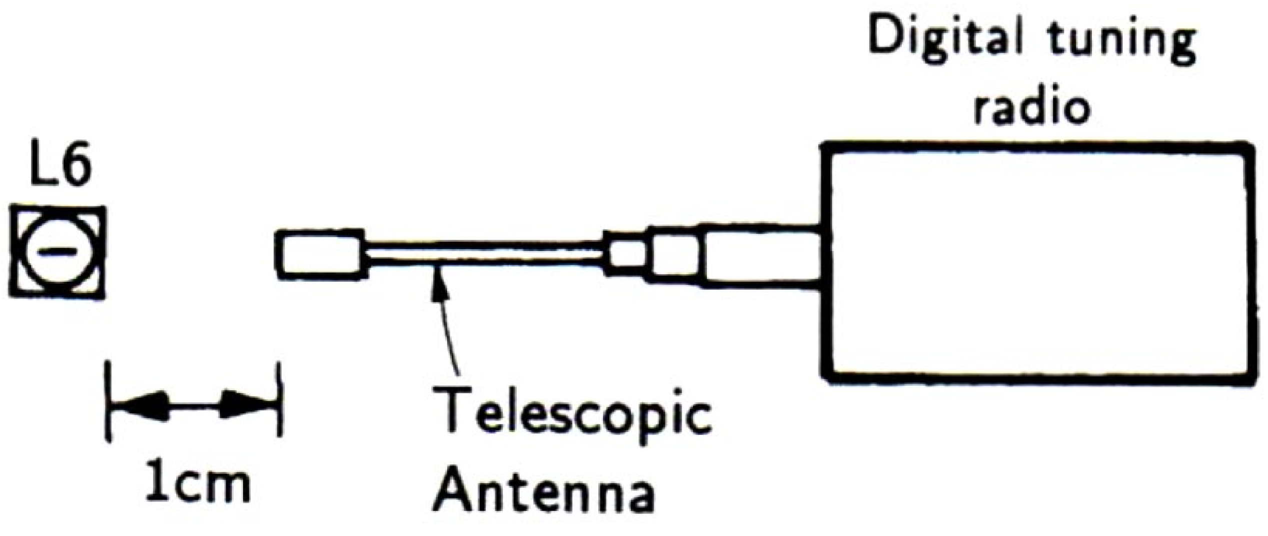

FM Frequency Coverage Adjustment

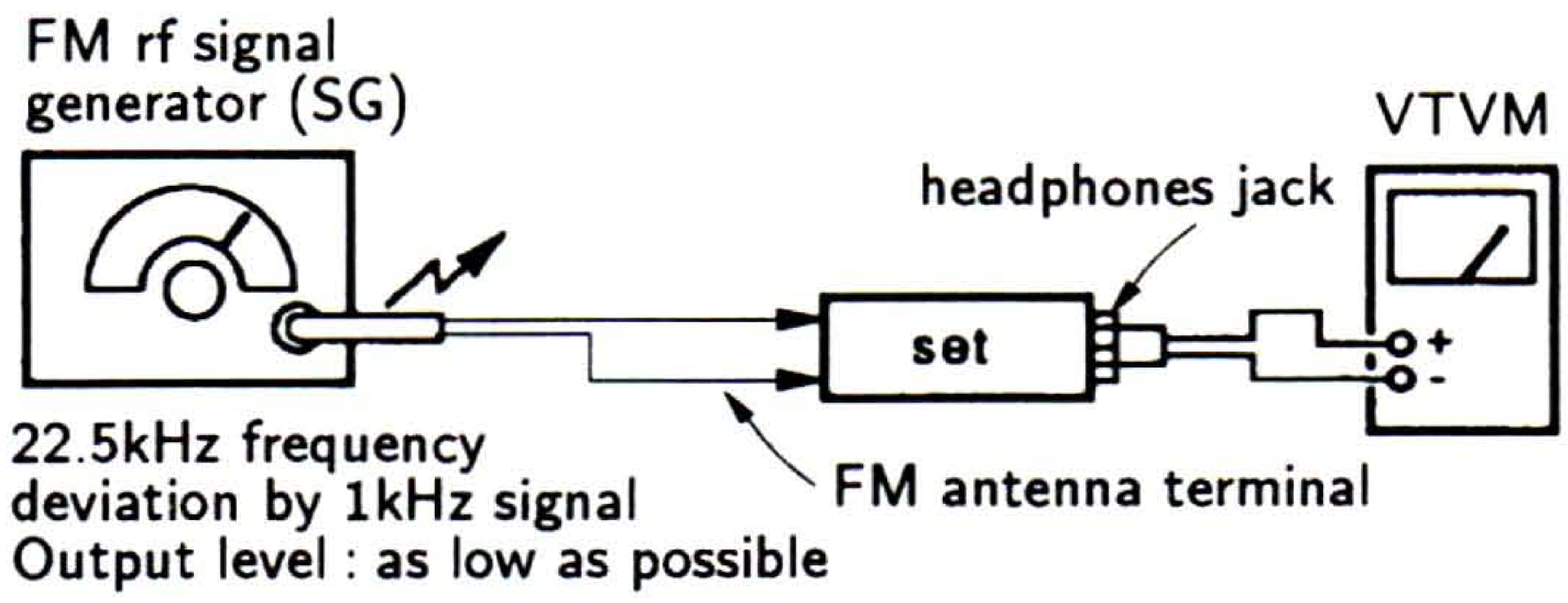

Function switch : RADIO FM ST

Band switch : FM

- Repeat the procedure in each adjustment several times since L3 affects CT3 and CT3 affects L3. This adjustment should end with the final adjustment of CT3.

Pointer position	SG frequency	Adjustment part	Reading on VTVM
f minimum	(86.5 MHz) 〔87.35MHz〕 <87.35MHz>	L3	maximum
f maximum	(109.5 MHz) 〔107.8MHz〕 <108.25MHz>	CT3	maximum

( ) : AEP model only

〔 〕 : German, Saudi Arabia model only

< > : Italian model only

AM Frequency Coverage Adjustment

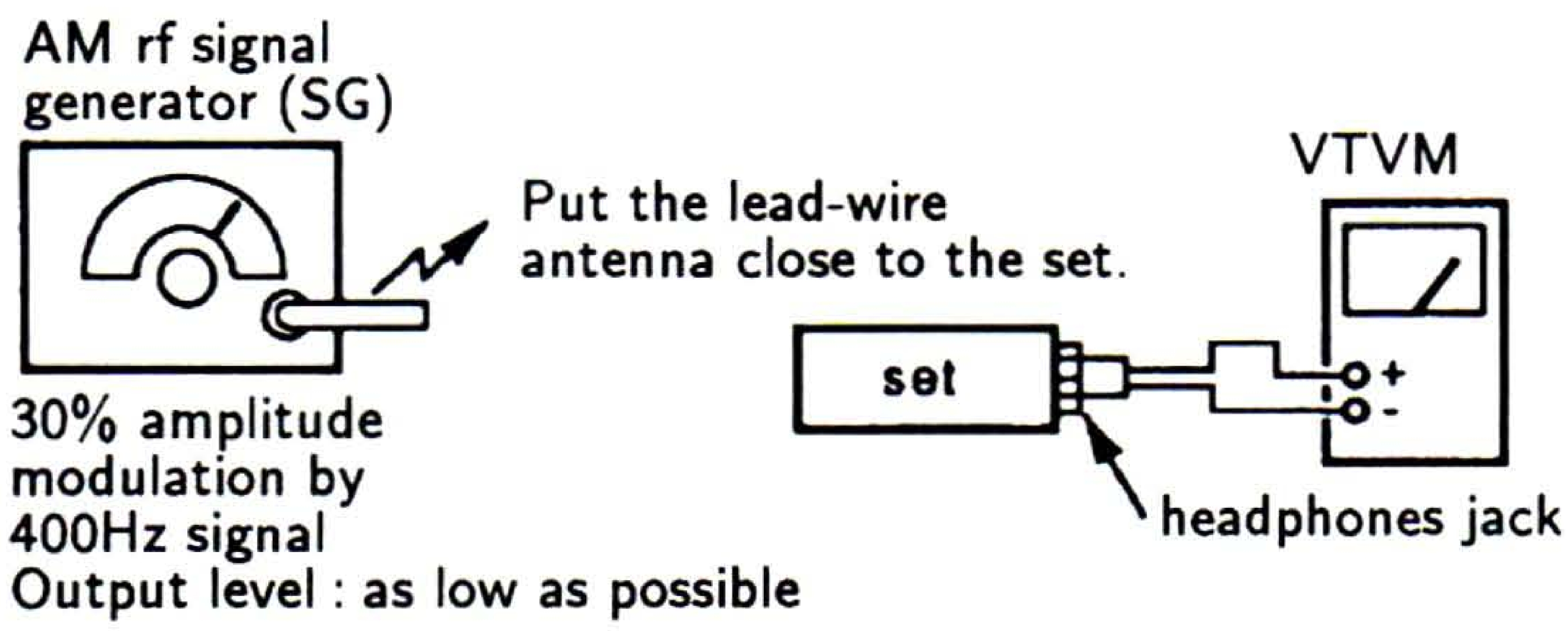

Function switch : RADIO FM ST

Band switch : AM

- Repeat the procedure in each adjustment several times since L1 affects CT1 and CT1 affects L1. This adjustment should end with the final adjustment of CT1.

Pointer position	SG frequency	Adjustment part	Reading on VTVM
f minimum	515kHz <516.5kHz>	L1	maximum
f maximum	1680kHz <1631.5kHz>	CT1	maximum

< > : Italian model only

AM Tracking Adjustment

Function switch : RADIO FM ST

Band switch : AM

- Repeat the procedure in each adjustment several times since L2 affects CT2 and CT2 affects L2. This adjustment should end with the final adjustment of CT2.

SG and set frequency	Adjustment part	Reading on VTVM
620kHz	L2	maximum
1400kHz	CT2	

NOTE :

Test equipment is settled as same as AM Frequency coverage adjsutment.

www.hifiengine.com

Adjustment Location

— component side —

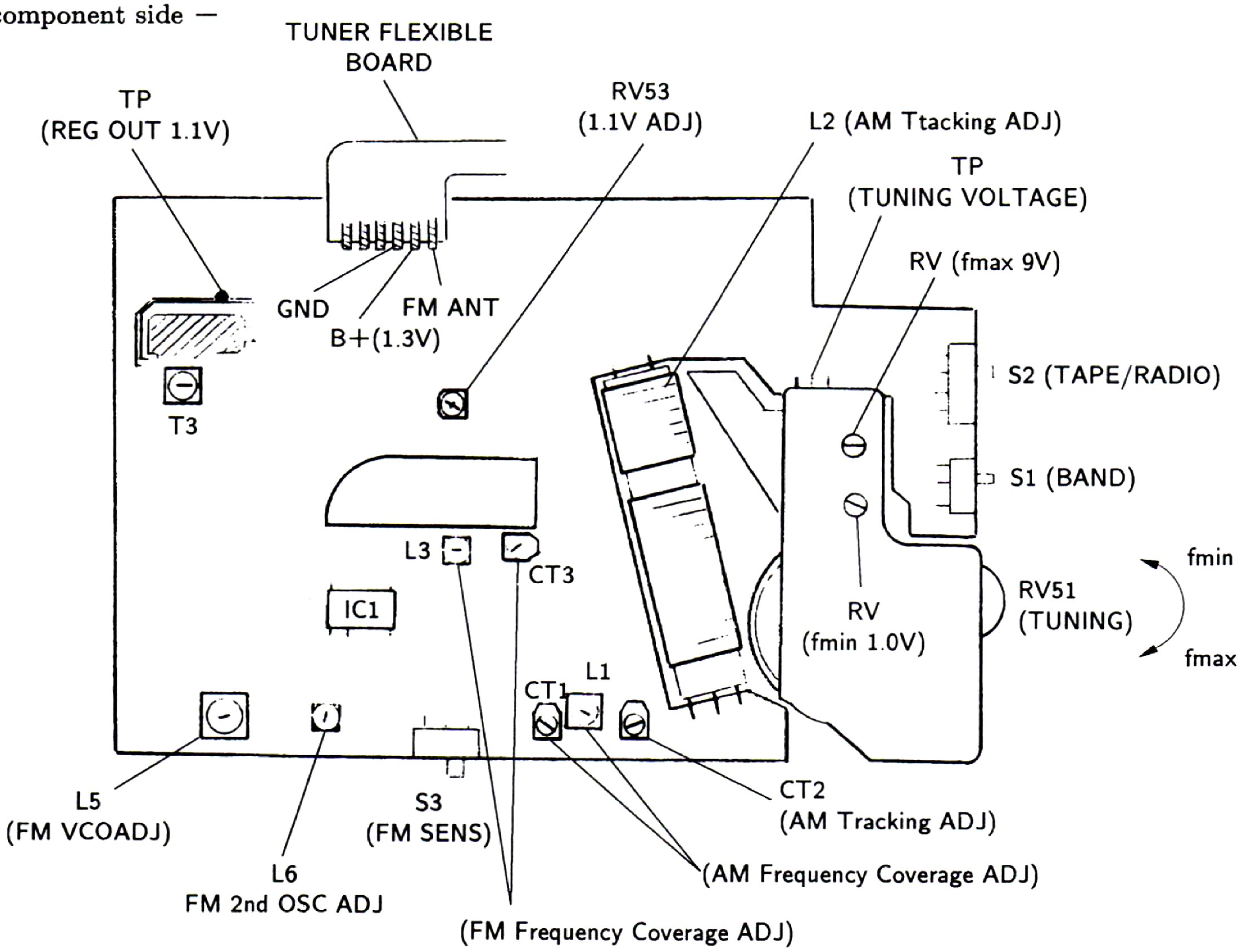

Tuner Section ONLY for WM-GX51

FM SECTION

BAND switch : FM

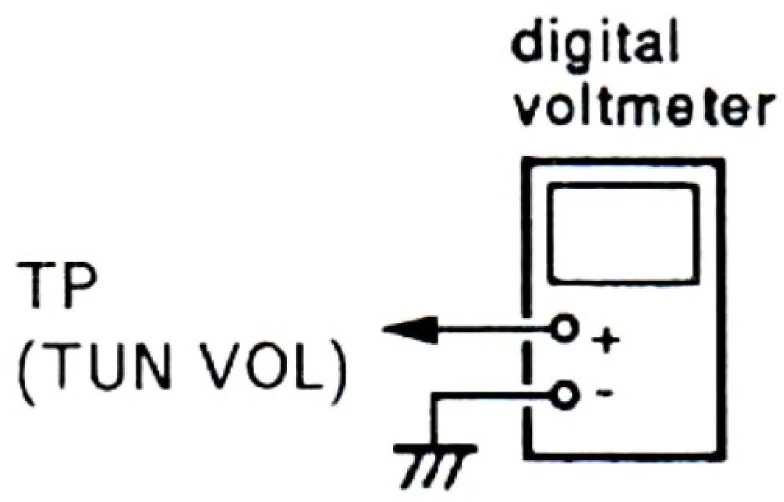

FM TUNING VOLTAGE ADJUSTMENT	
Adjust for following values on digital voltmeter.	
Display indication	FM 87.5MHz
Digital voltmeter reading	2.7V ± 0.02V
Adjustment part	L3

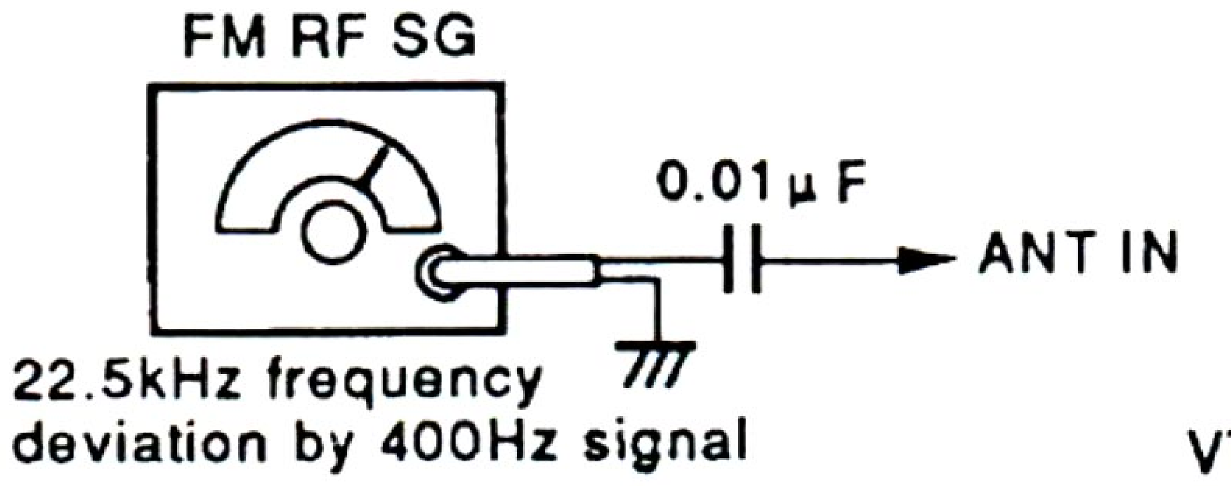

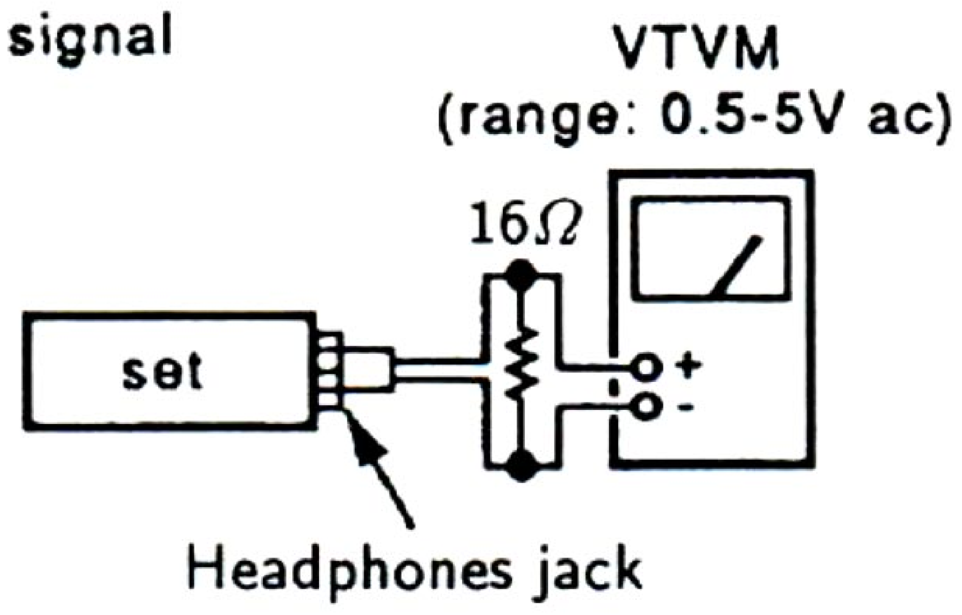

- Repeat the procedures in each adjustment severl times, and the tracking adjustment should be finally done by the trimmer capacitors.

FM TRACKING ADJUSTMENT		
Adjust for maximum reading on VTVM.		
Display indication	FM 87.5MHz	FM 108.0MHz
SG frequency	87.5MHz	108.0MHz
Adjustment part	L2	CT2

VCO Adjustment

BAND switch : FM

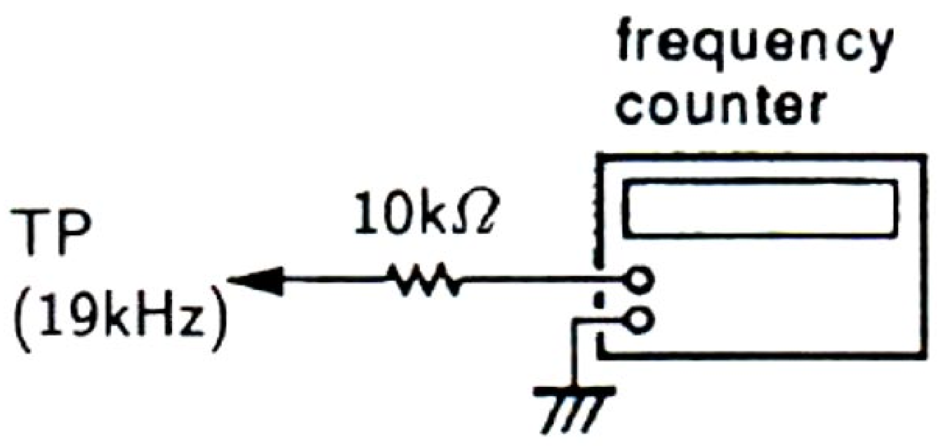

Procedure :

1. Connect an electrolyric capacitor 1μF between TP (DET OUT) and ground.
2. Adjust RV1 for 19 ± 0.02kHz on the counter.
3. Remove electrolytic capacitor connected in step 1.

www.hifiengine.com

AM SECTION

BAND switch : AM

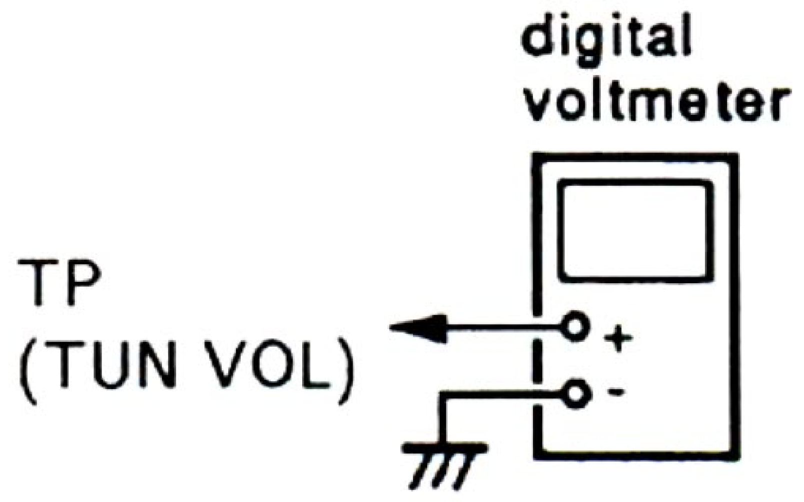

AM TUNING VOLTAGE ADJUSTMENT	
Adjust for following values on digital voltmeter.	
Display indication	AM 531kHz
Digital voltmeter reading	1.1V ± 0.02V
Adjustment part	T2

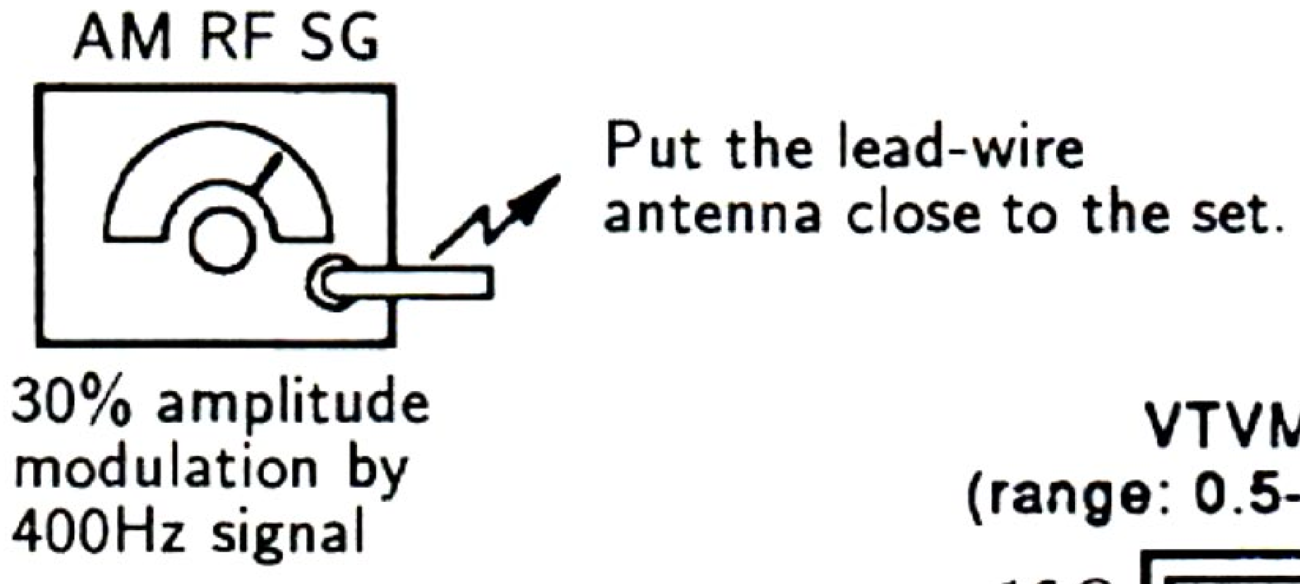

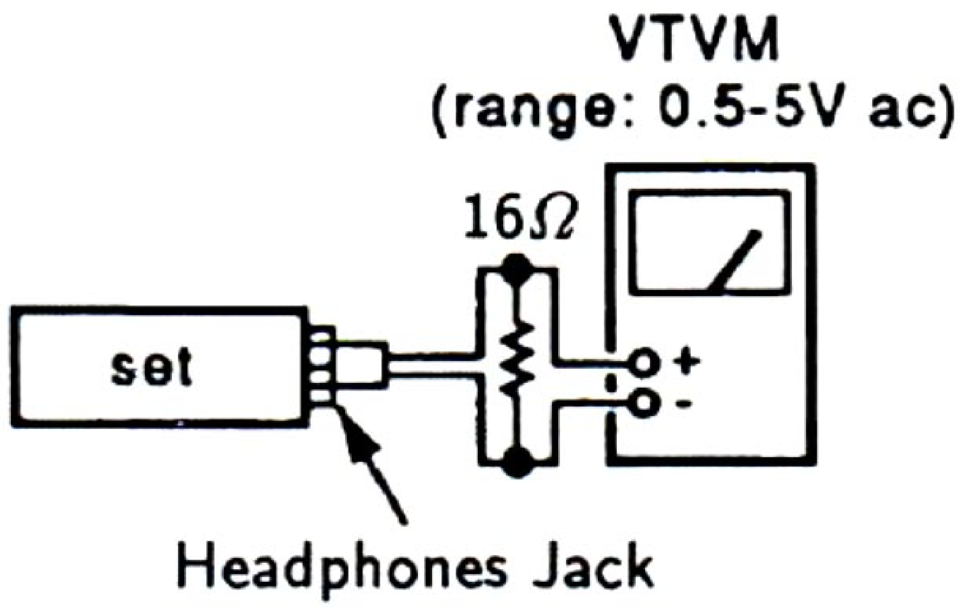

● Repeat the procedures in each adjustment severl times, and the tracking adjustment should be finally done by the trimmer capacitors.

AM TRACKING ADJUSTMENT		
Adjust for maximum reading on VTVM.		
Display indication	AM 621kHz	AM 1,395kHz
SG frequency	621kHz	1,395kHz
Adjustment part	L1	CT1

AM IF ALIGNMENT	
Adjust for for a maximun reading on VTVM.	
SG frequency	455kHz
Adjustment part	T1

Adjustment Location

TUNER BOARD

— Component Side —

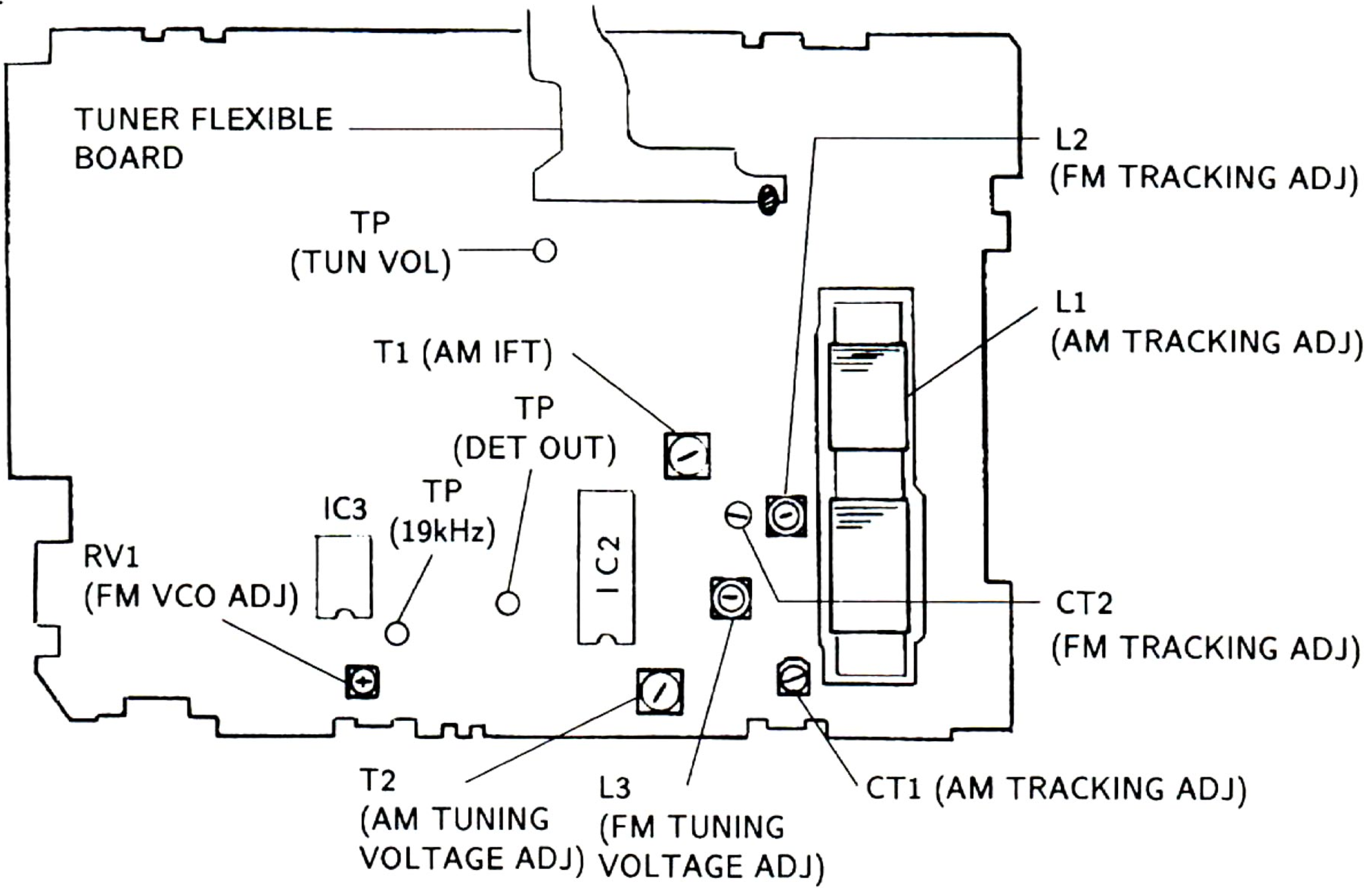

SECTION 4
DIAGRAMS

4-1. BLOCK DIAGRAM (AUDIO SECTION)

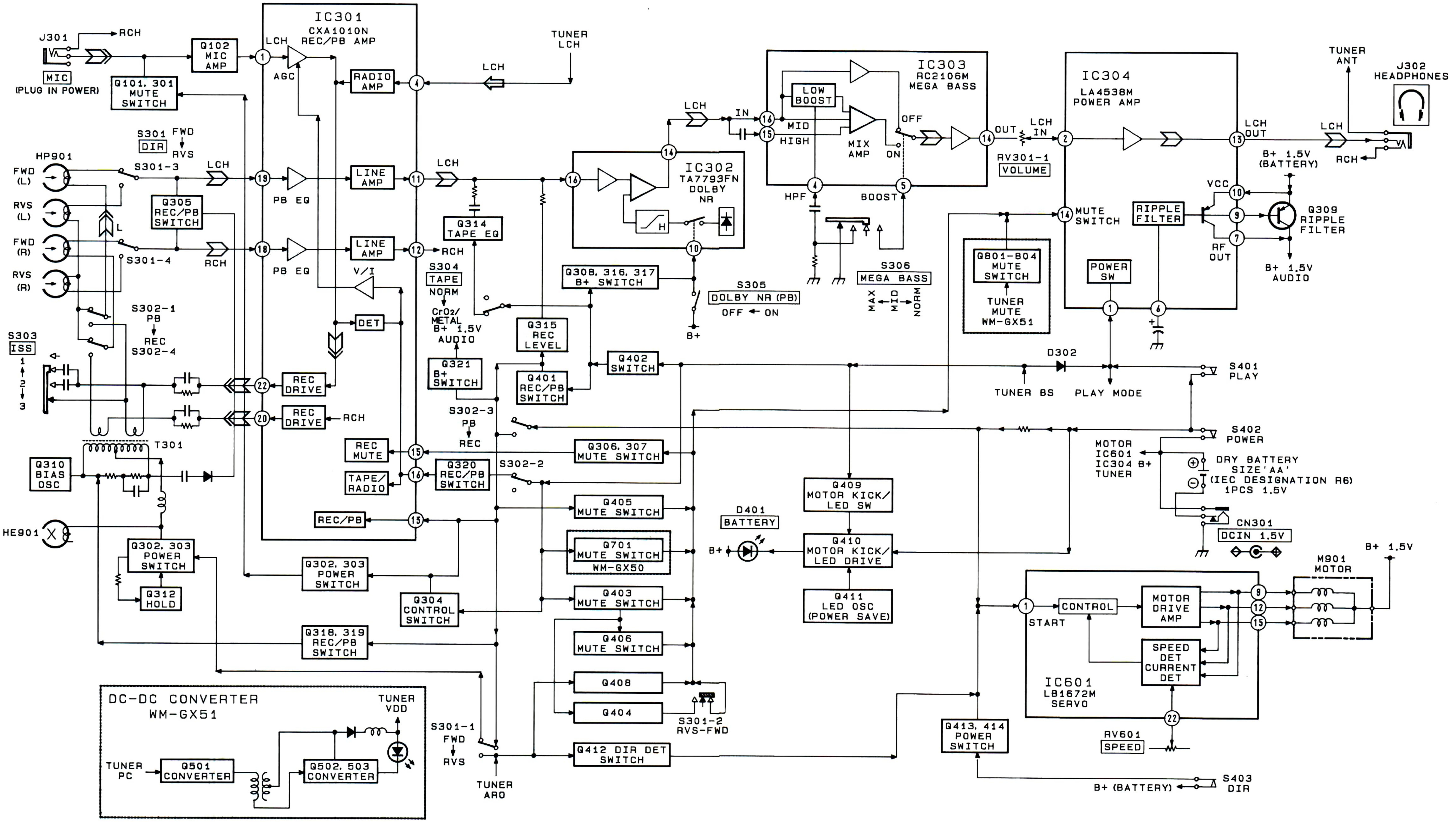

BLOCK DIAGRAM (TUNER SECTION WM-GX50)

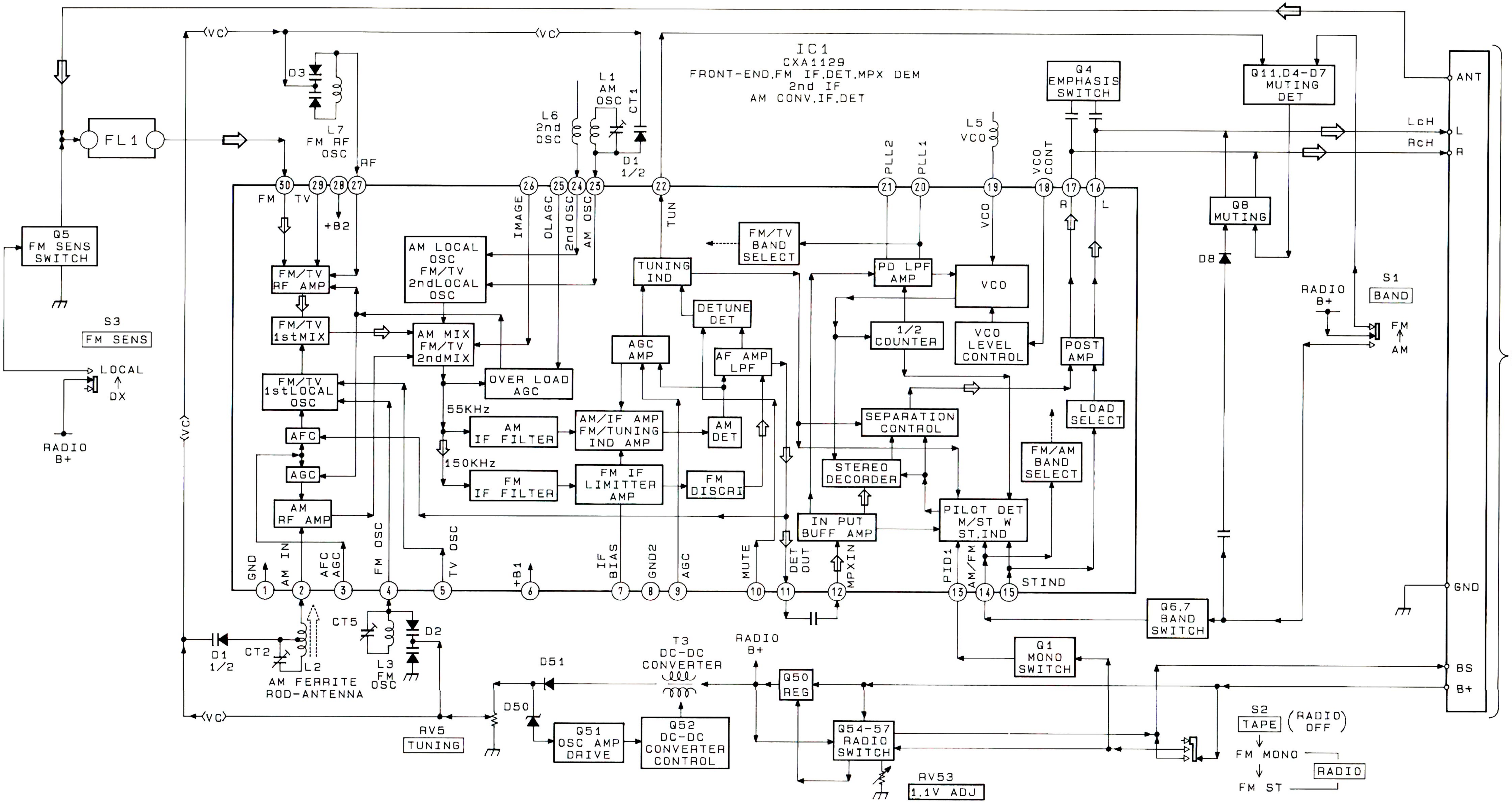

BLOCK DIAGRAM (TUNER SECTION WM-GX51)

4-2. PRINTED WIRING BOARDS (AUDIO SECTION)

• SEMICONDUCTOR LEAD LAYOUTS

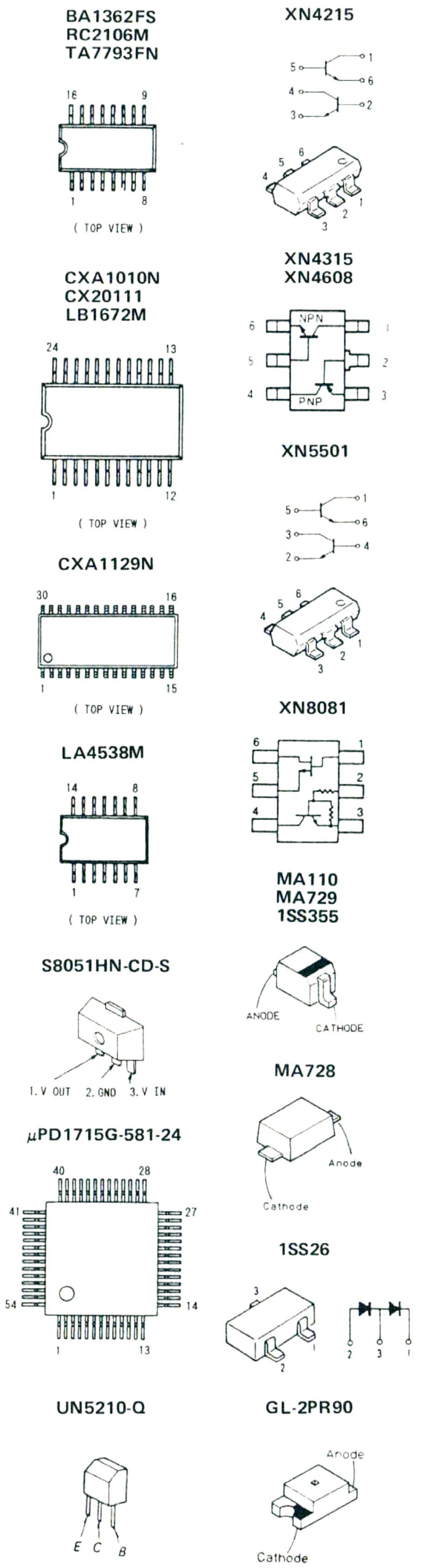

• Semiconductor Location

Ref. No	Location
D302	G-6
D303	D-15
D304	D-15
D305	D-16
D401	G-2
IC301	C-18
IC302	E-18
IC303	G-17
IC304	G-19
IC601	F-21
Q101	C-21
Q102	C-22
Q201	C-21
Q202	C-22
Q301	C-21
Q302	C-21
Q303	C-22
Q304	C-22
Q305	C-19
Q306	D-19
Q307	D-19
Q308	E-7
Q309	H-19
Q310	E-15
Q311	F-16
Q312	F-15
Q313	F-16
Q314	D-7
Q315	D-7
Q316	E-7
Q317	E-8
Q318	E-16
Q319	F-9
Q320	F-8
Q321	D-7
Q401	E-6
Q402	E-7
Q403	F-7
Q404	F-6
Q405	F-7
Q406	F-7
Q408	F-6
Q409	G-22
Q410	H-22
Q411	H-22
Q412	F-21
Q413	F-21
Q414	G-4
Q701 (GX50)	F-7
Q801 (GX51)	F-8
Q802 (GX51)	F-6
Q803 (GX51)	F-6
Q804 (GX51)	F-6

CL-70G-CD

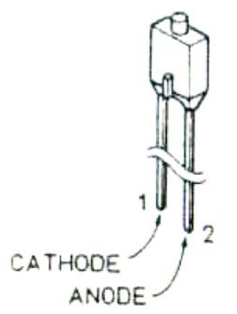

Note:
- ■ : parts mounted on the conductor side.
- ● : Through hole.
- : Pattern on the side which is seen.
- : Pattern of the rear side.

[AUDIO BOARD]
-Side B-

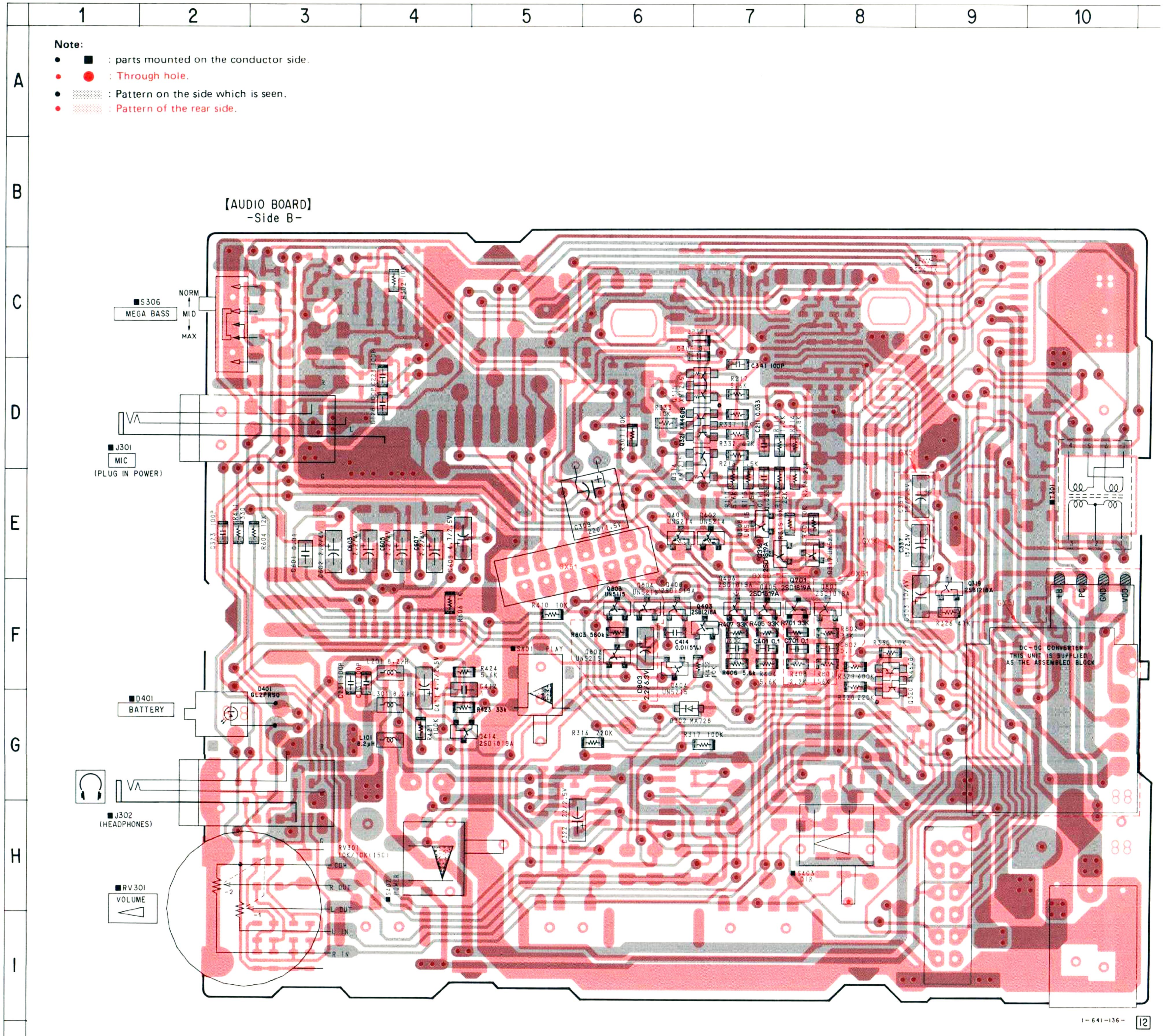

11	12	13	14	15	16	17	18	19	20	21	22	23	24

• IC BLOCK DIAGRAMS

IC302 TA7793FN

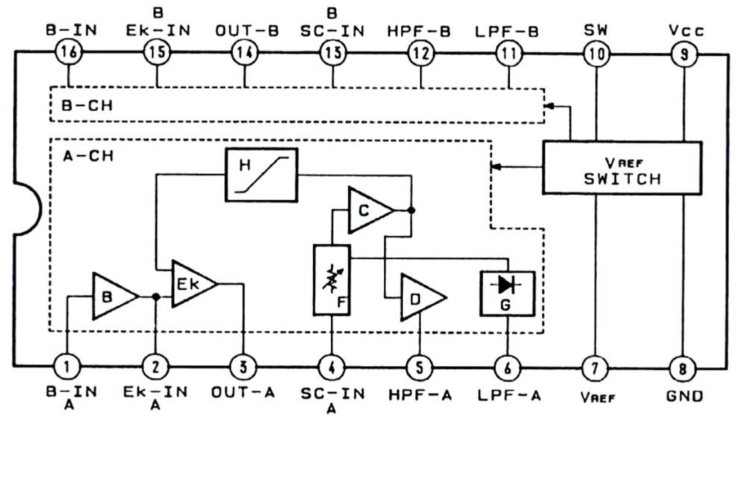

IC303 RC2106M

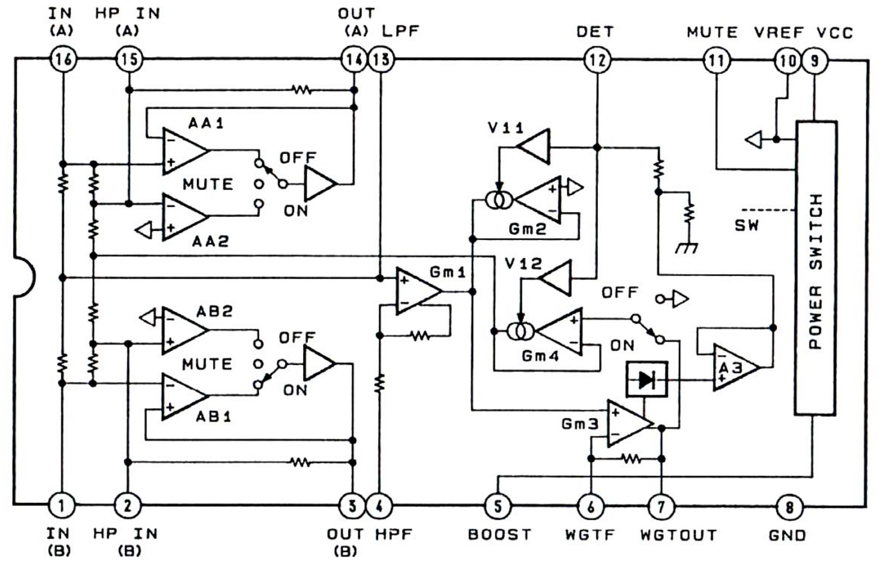

IC304 LA4538M

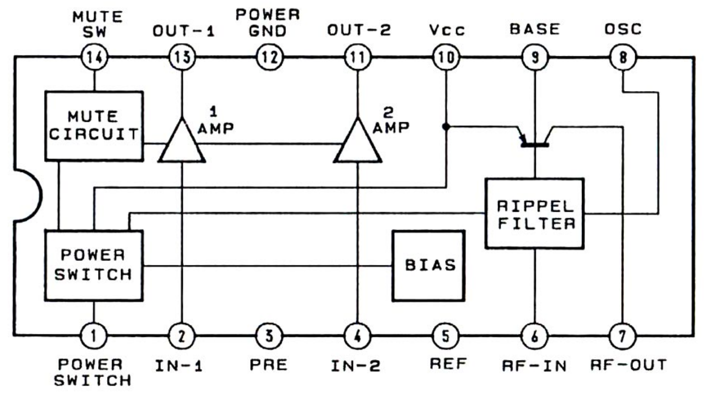

IC601 LB1672M

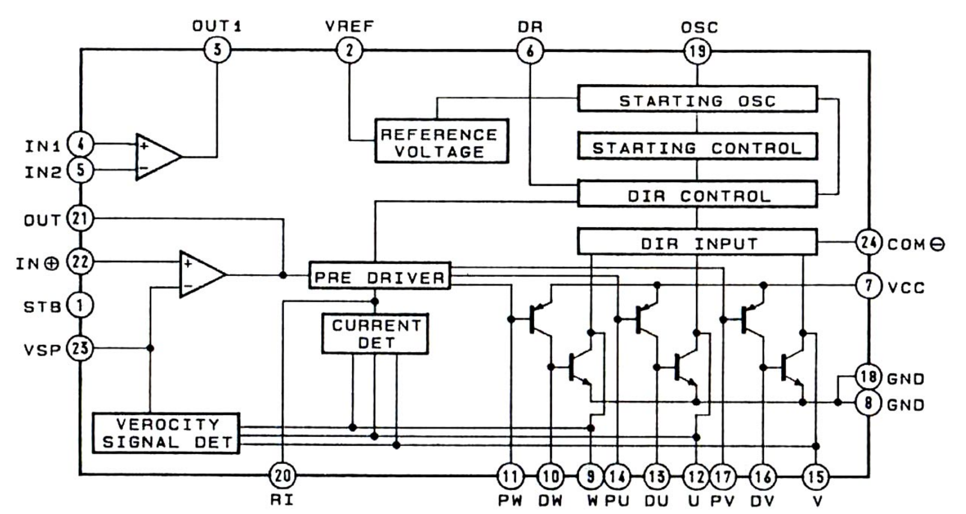

IC301 CXA1010N

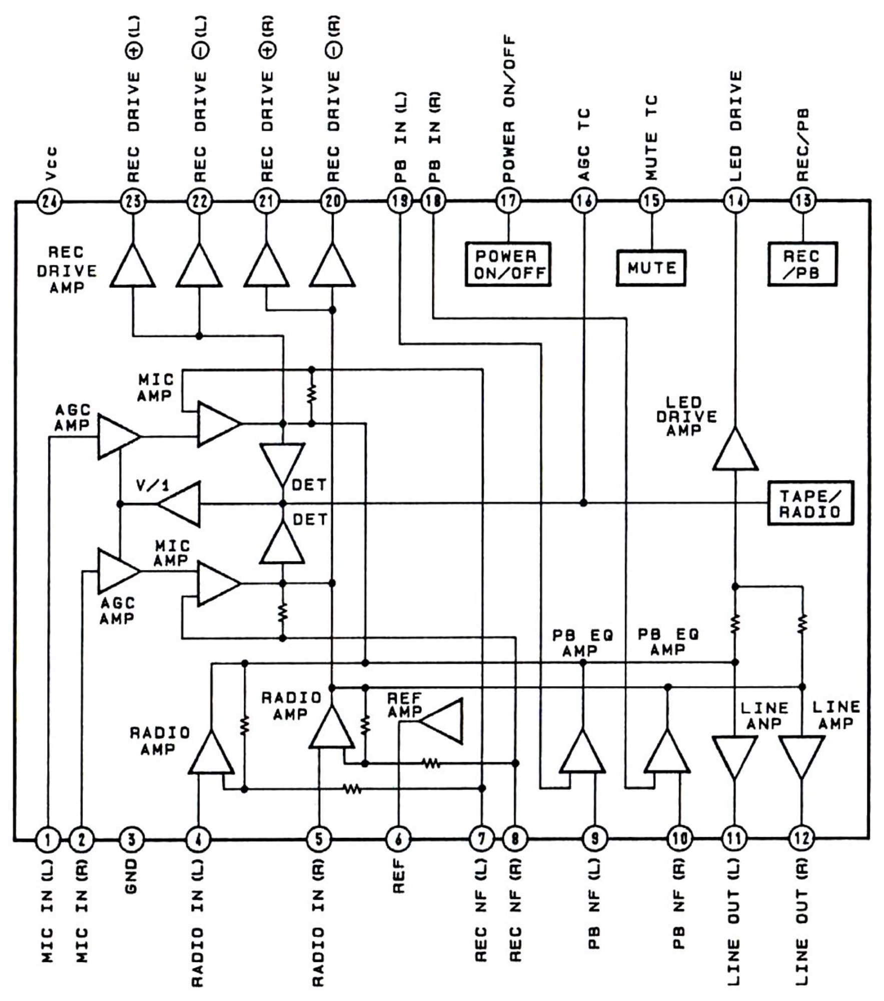

4-3. SCHEMATIC DIAGRAM (AUDIO SECTION)

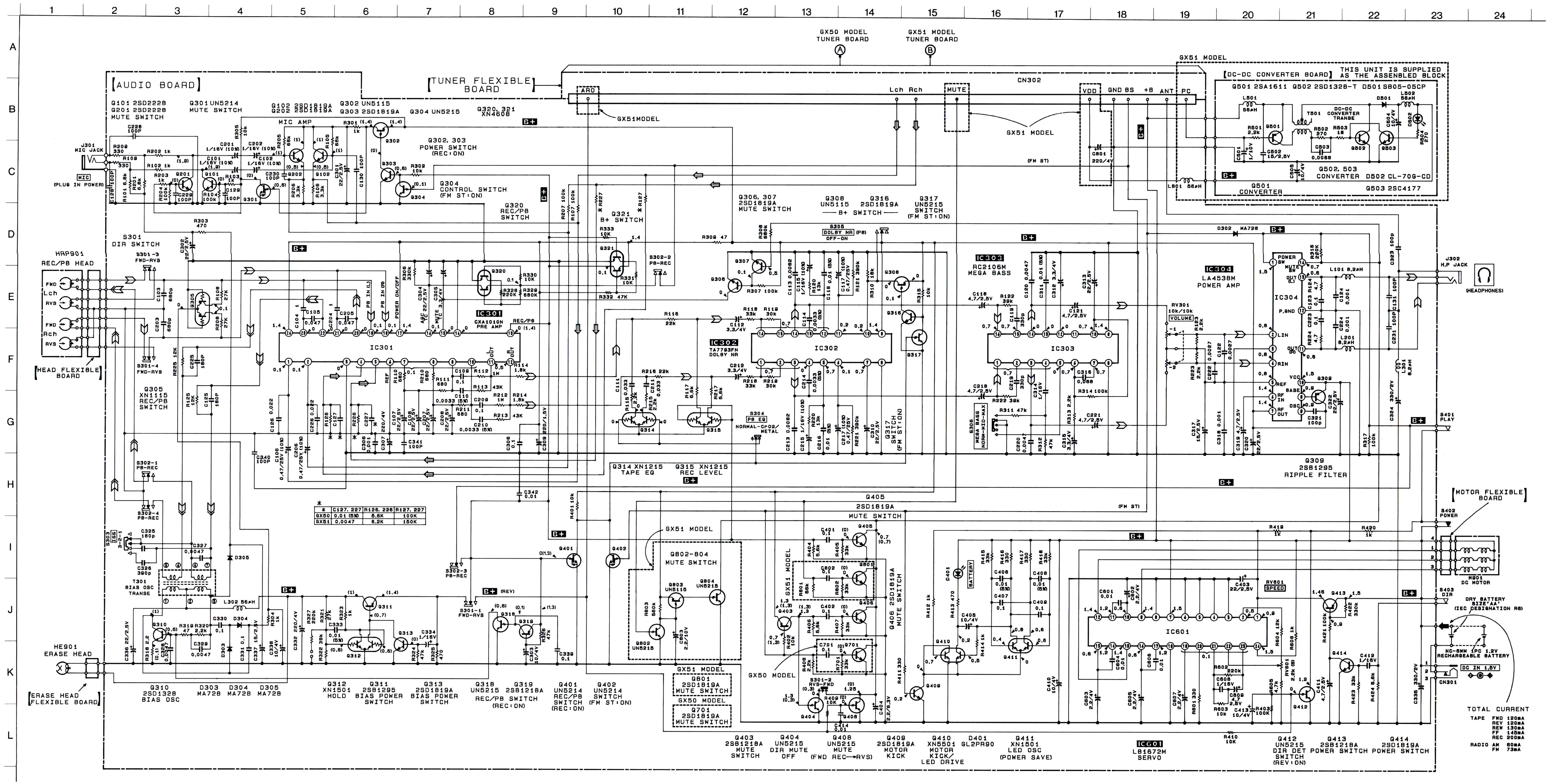

Note:

- All capacitors are in μF unless otherwise noted. pF: μμF 50WV or less are not indicated except for electrolytics and tantalums.
- All resistors are in Ω and 1/4 W or less unless otherwise specified.
- Switch with sliding contact indicated by hatched lines shows shorting type.
- B+ : B+ line.
- ▭ : adjustment for repair.
- Total current is measured with no cassette installed.
- Power voltage is dc 1.5V and fed with reglated dc power supply from external power voltage jack.
- Voltage and waveforms are dc with respect to ground under no-signal (detuned) conditions.
  no mark : FWD
  ( ) : REC
- Voltages are taken with a VOM. (Input impedance 10MΩ) Voltage variations may be noted due to normal production tolerances.
- Signal path.
  ⇨ : FM
  ⊳ : PB
  ⊳⊳ : REC

4-4. SCHEMATIC DIAGRAM (TUNER SECTION WM-GX51)

- **IC BLOCK DIAGRAMS**

IC2 CX20111

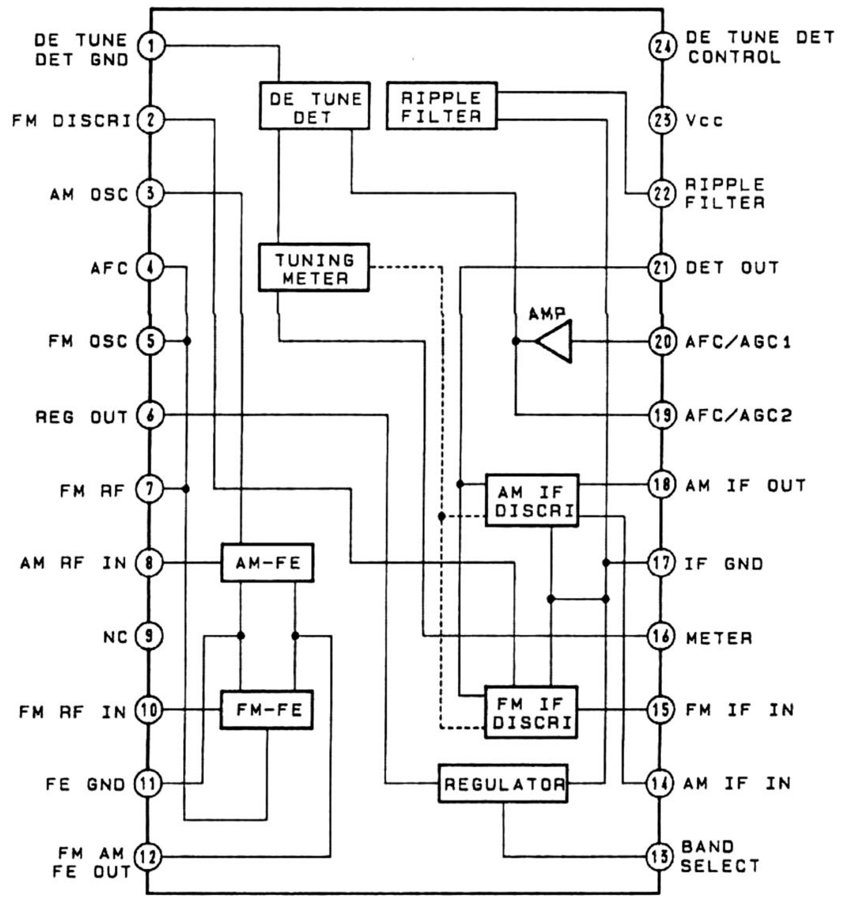

IC3 BA1362FS

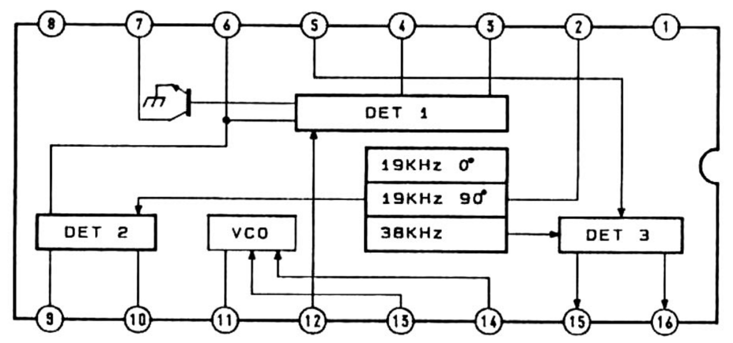

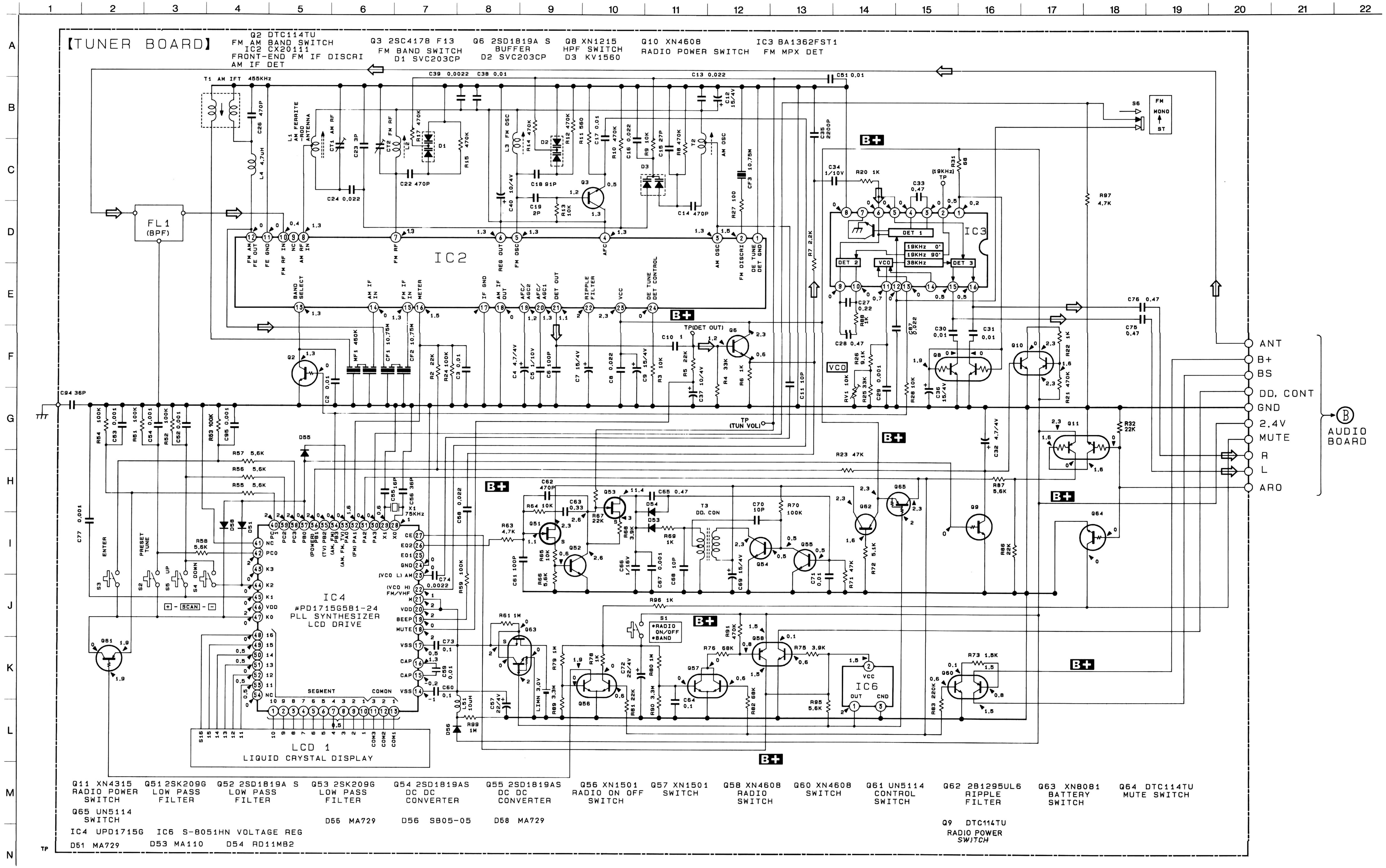

Note:

- All capacitors are in μF unless otherwise noted. pF: μμF 50WV or less are not indicated except for electrolytics and tantalums.
- All resistors are in Ω and ¼W or less unless otherwise specified.
- B+ : B+ line.
- ▭ : adjustment for repair.
- Total current is measured with no cassette installed.
- Power voltage is dc 1.5V and fed with reglated dc power supply from external power voltage jack.
- Voltage and waveforms are dc with respect to ground under no-signal (detuned) conditions.

  no mark : FM
- Voltages are taken with a VOM. (Input impedance 10MΩ) Voltage variations may be noted due to normal production tolerances.
- Signal path.

  ⇨ : FM

4-5. PRINTED WIRING BOARDS (TUNER SECTION WM-GX51)

● **Semiconductor Location**

Ref. No	Location
D1	F-8
D2	G-9
D3	H-8
D51	D-1
D53	F-5
D54	E-5
D55	E-2
D56	D-5
D58	C-1
IC2	F-7
IC3	G-4
IC4	D-3
IC6	E-4
Q2	E-6
Q3	G-8
Q6	G-6
Q8	H-4
Q9	D-6
Q10	D-6
Q11	E-1
Q51	E-4
Q52	E-5
Q53	F-5
Q54	F-4
Q55	E-4
Q56	B-11
Q57	B-10
Q58	B-11
Q60	B-10
Q61	A-10
Q62	E-4
Q63	E-3
Q64	B-10
Q65	E-3

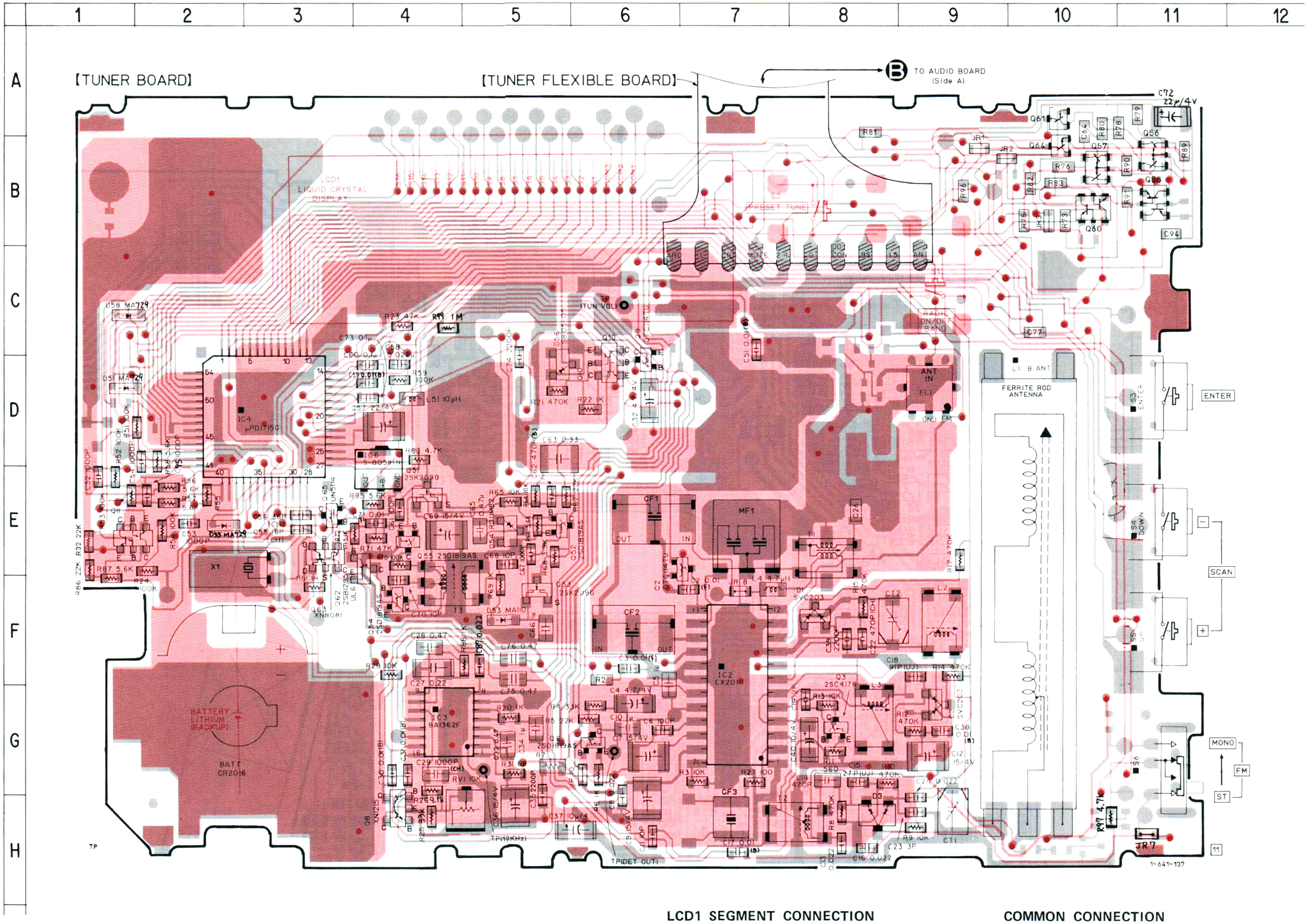

LCD1 SEGMENT CONNECTION

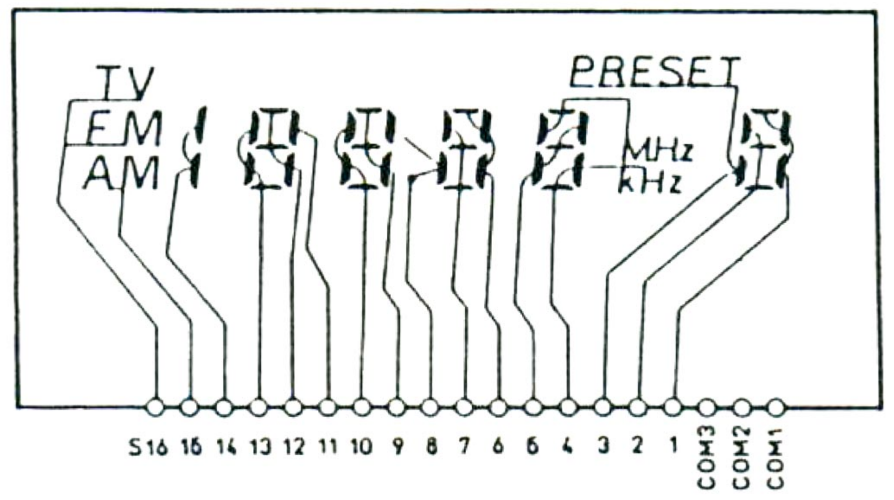

COMMON CONNECTION

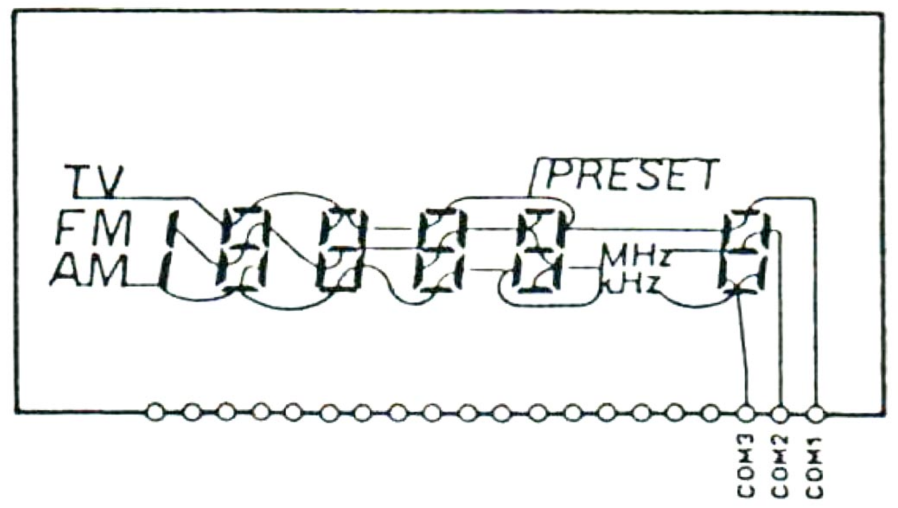

Note:

- ■ : parts mounted on the conductor side.
- ● : Through hole.
- ░ : Pattern on the side which is seen.
- ░ : Pattern of the rear side.

4-6. PRINTED WIRING BOARDS (TUNER SECTION WM-GX50)

● **Semiconductor Location**

Ref. No	Location
D1	F-7
D2	E-6
D3	G-5
D4	F-1
D5	F-1
D6	F-2
D7	G-2
D8	E-2
D9	B-6
D50	C-2
D51	C-2
D52	C-6
IC1	F-4
Q1	E-3
Q4	F-3
Q5	B-5
Q6	F-2
Q7	F-2
Q8	E-2
Q11	G-1
Q50	C-4
Q51	D-2
Q52	D-2
Q54	C-5
Q55	C-5
Q56	C-4
Q57	C-6

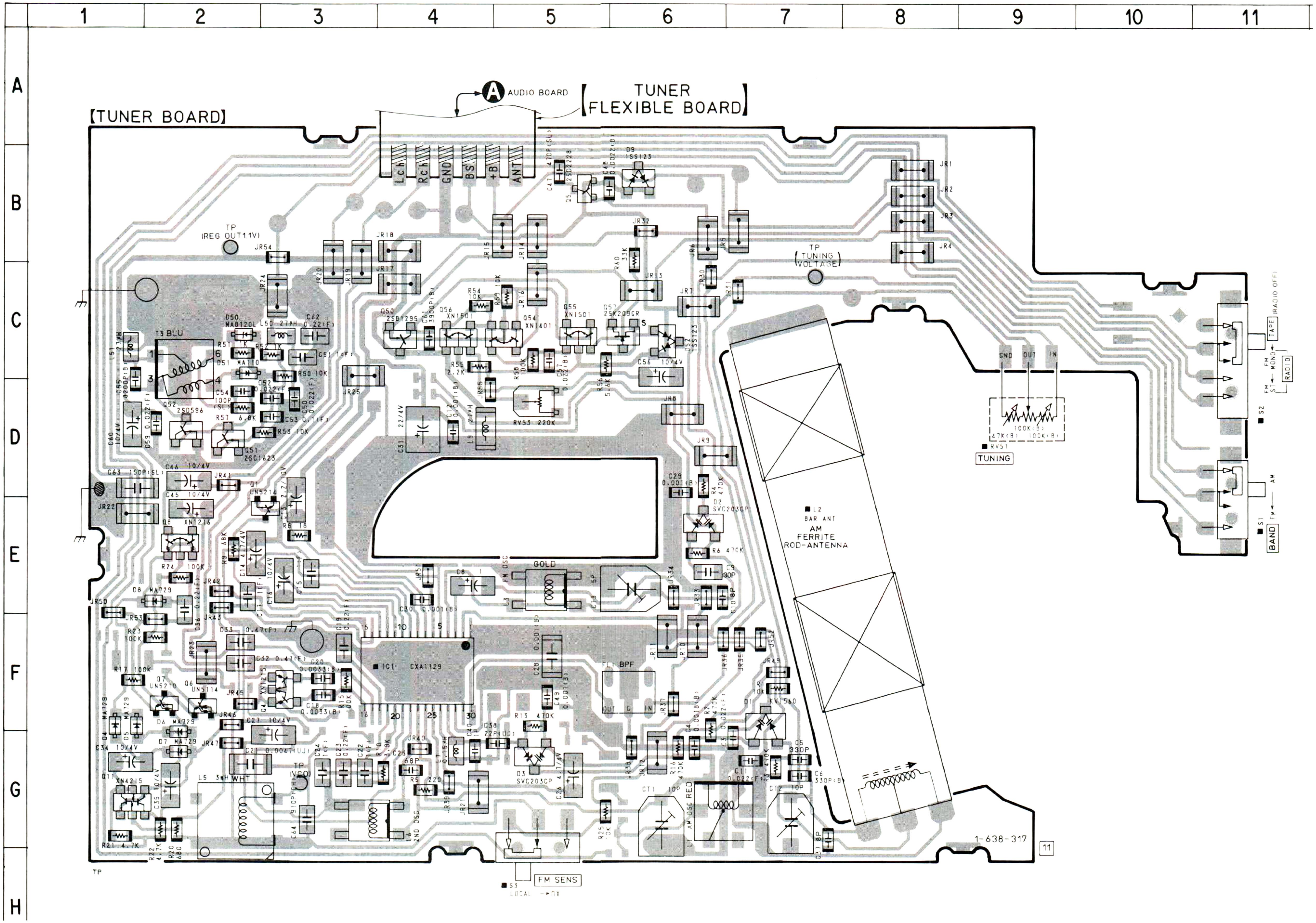

Note:

- ■ : parts mounted on the conductor side.
- ░ : Pattern on the side which is seen.

4-7. SCHEMATIC DIAGRAM (TUNER SECTION WM-GX50)

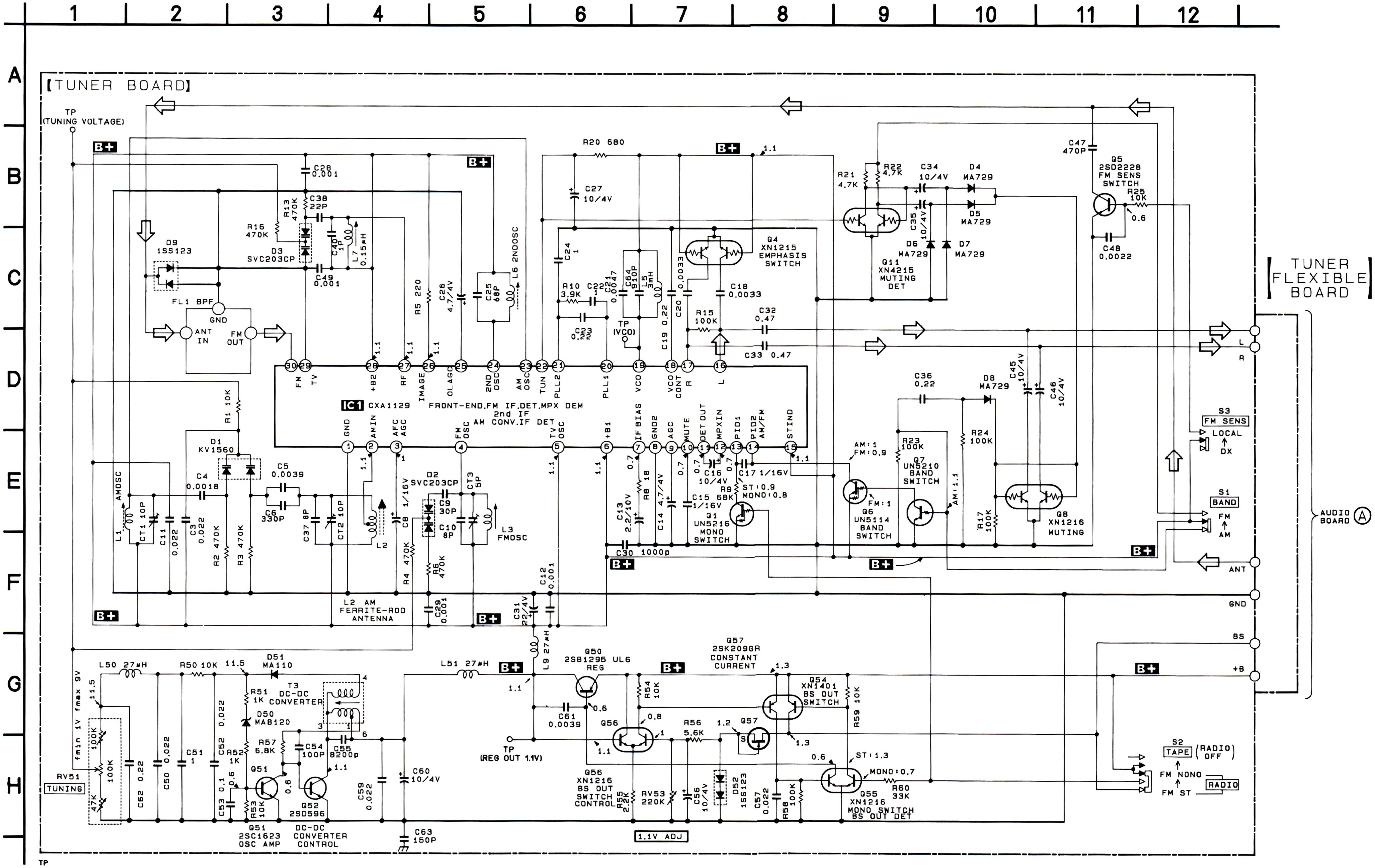

Note:

- All capacitors are in µF unless otherwise noted. pF: µµF 50WV or less are not indicated except for electrolytics and tantalums.
- All resistors are in Ω and ¼W or less unless otherwise specified.
- B+ : B+ line.
- ▭ : adjustment for repair.
- Total current is measured with no cassette installed.
- Power voltage is dc 1V and fed with reglated dc power supply from external power voltage jack.
- Voltage and waveforms are dc with respect to ground under no-signal (detuned) conditions.
  no mark : FM
- Voltages are taken with a VOM. (Input impedance 10MΩ) Voltage variations may be noted due to normal production tolerances.
- Signal path.
  ⇨ : FM